Tcirg1 Cas9-CKO *Strategy*

Designer: Daohua Xu

GemPharmatech Co.,Ltd

Project Overview

Project Name	*Tcirg1*
Project type	Cas9-CKO
Animal background	C57BL/6JGpt

Conditional Knockout strategy

This model will use CRISPR/Cas9 technology to edit the *Tcirg1* gene. The schematic diagram is as follows:

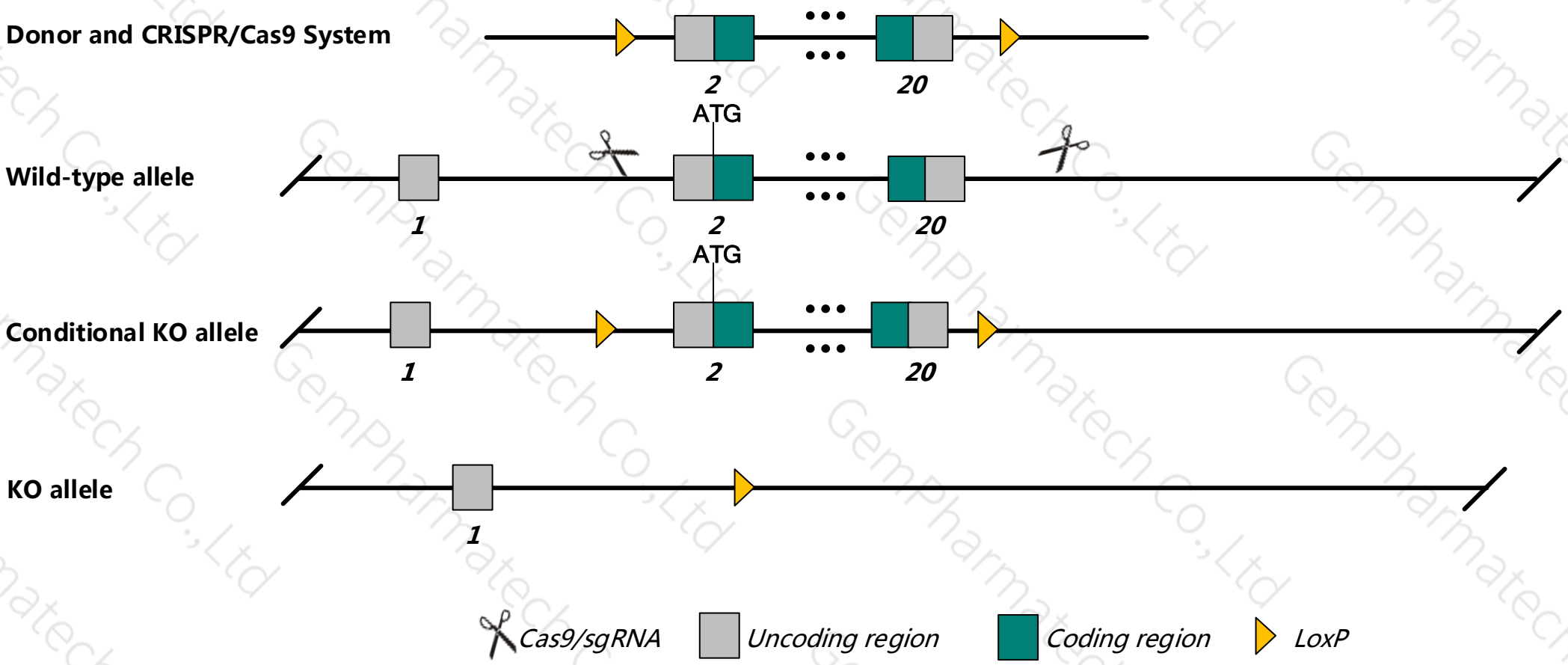

Technical routes

- The *Tcirg1* gene has 13 transcripts, According to the structure of *Tcirg1* gene, exon2-exon20 of *Tcirg1-201* transcript is recommended as the knockout region.The region contains the all of coding seqence.Knock out the region,result in destruction of protein.

- This project uses CRISPR/Cas9 technology to modify *Tcirg1* gene. The brief process is as follows: sgRNA was transcribed in vitro, donor vector was constructed, Cas9, sgRNA and donor were microinjected into fertilized eggs of C57BL/6JGpt mice and homologous recombination was carried out to obtain F0 mice. A stable and hereditary F1 generation mouse model was obtained by mating F0 generation mice with C57BL/6JGpt mice which were confirmed positive by PCR-sequencing.

- The flox mice was knocked out after mating with mice expressing Cre recombinase, resulting in the loss of function of the target gene in specific tissues and cell types.

Notice

- According to the existing MGI data，Homozygotes for mutant alleles exhibit severe osteopetrosis with increased bone density due to failure of secondary bone resorption. Mutants lack teeth and die around 30-40 days of age.

- The *Tcirg1* gene is located in the Chr19. If the knockout mice are mixed with other mice, two target genes are avoided on the same chromosome as possible, otherwise the offspring of mice with double gene positive and homozygous gene knockout can not be obtained.

- This Strategy is designed based on genetic information in existing databases. Due to the complexity of gene transcription and translation processes, all risks cannot be predicted under existing information.

Gene information （NCBI）

集萃药康 GemPharmatech

Tcirg1 T cell, immune regulator 1, ATPase, H+ transporting, lysosomal V0 protein A3 [*Mus musculus* (house mouse)]

Gene ID: 27060, updated on 8-Jan-2019

Summary

Official Symbol	Tcirg1 provided by MGI
Official Full Name	T cell, immune regulator 1, ATPase, H+ transporting, lysosomal V0 protein A3 provided by MGI
Primary source	MGI:MGI:1350931
See related	Ensembl:ENSMUSG00000001750
Gene type	protein coding
RefSeq status	VALIDATED
Organism	Mus musculus
Lineage	Eukaryota; Metazoa; Chordata; Craniata; Vertebrata; Euteleostomi; Mammalia; Eutheria; Euarchontoglires; Glires; Rodentia; Myomorpha; Muroidea; Muridae; Murinae; Mus; Mus
Also known as	oc; Stv1; Vph1; Atp6i; OPTB1; TIRC7; ATP6a3; OC-116; ATP6N1C
Expression	Ubiquitous expression in spleen adult (RPKM 61.8), adrenal adult (RPKM 46.6) and 27 other tissues See more
Orthologs	human all

Transcript information （Ensembl）

The gene has 13 transcripts, and all transcripts are shown below ：

Show/hide columns (1 hidden) Filter

Name	Transcript ID	bp	Protein	Biotype	CCDS	UniProt	RefSeq	Flags
Tcirg1-204	ENSMUST00000126070.8	3041	834aa	Protein coding	CCDS29401	Q9JHF5	NM_001167784 NP_001161256	TSL:1 GENCODE basic APPRIS P1
Tcirg1-211	ENSMUST00000145791.7	2729	834aa	Protein coding	CCDS29401	Q9JHF5	NM_016921 NP_058617	TSL:1 GENCODE basic APPRIS P1
Tcirg1-201	ENSMUST00000001801.10	2688	834aa	Protein coding	CCDS29401	Q9JHF5	NM_001136091 NP_001129563	TSL:1 GENCODE basic APPRIS P1
Tcirg1-210	ENSMUST00000135070.7	2424	72aa	Nonsense mediated decay	-	D6RFN1	-	TSL:5
Tcirg1-202	ENSMUST00000122885.7	1233	91aa	Nonsense mediated decay	-	F6ZFB8	-	CDS 5' incomplete TSL:5
Tcirg1-208	ENSMUST00000132164.1	813	191aa	Nonsense mediated decay	-	F6XRE6	-	CDS 5' incomplete TSL:5
Tcirg1-207	ENSMUST00000131327.7	2350	No protein	Retained intron	-	-	-	TSL:2
Tcirg1-203	ENSMUST00000125792.8	1066	No protein	Retained intron	-	-	-	TSL:5
Tcirg1-206	ENSMUST00000127308.1	923	No protein	Retained intron	-	-	-	TSL:5
Tcirg1-212	ENSMUST00000159824.7	692	No protein	Retained intron	-	-	-	TSL:2
Tcirg1-205	ENSMUST00000126643.2	568	No protein	Retained intron	-	-	-	TSL:2
Tcirg1-213	ENSMUST00000162688.1	467	No protein	Retained intron	-	-	-	TSL:1
Tcirg1-209	ENSMUST00000134698.1	463	No protein	Retained intron	-	-	-	TSL:3

The strategy is based on the design of *Tcirg1-201* transcript,The transcription is shown below ：

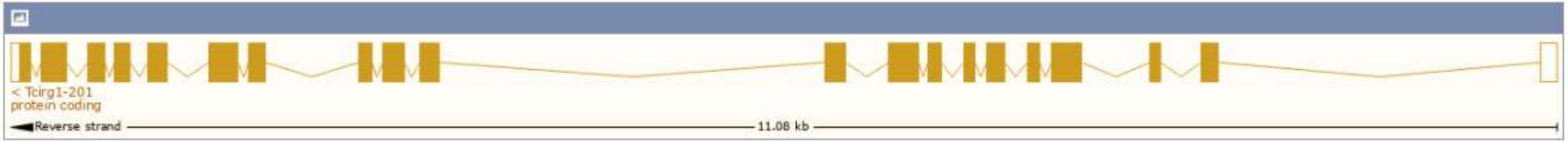

Genomic location distribution

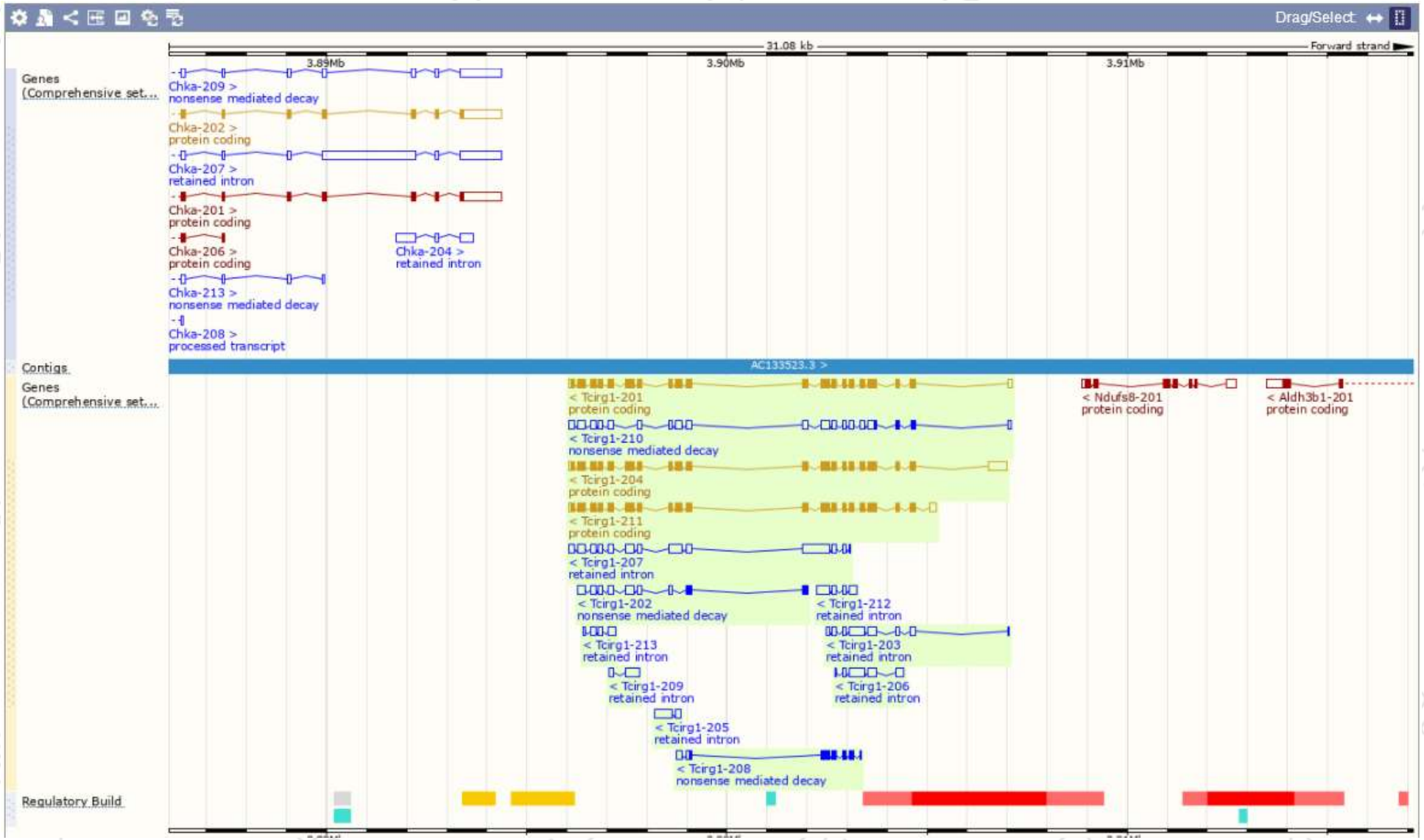

Protein domain

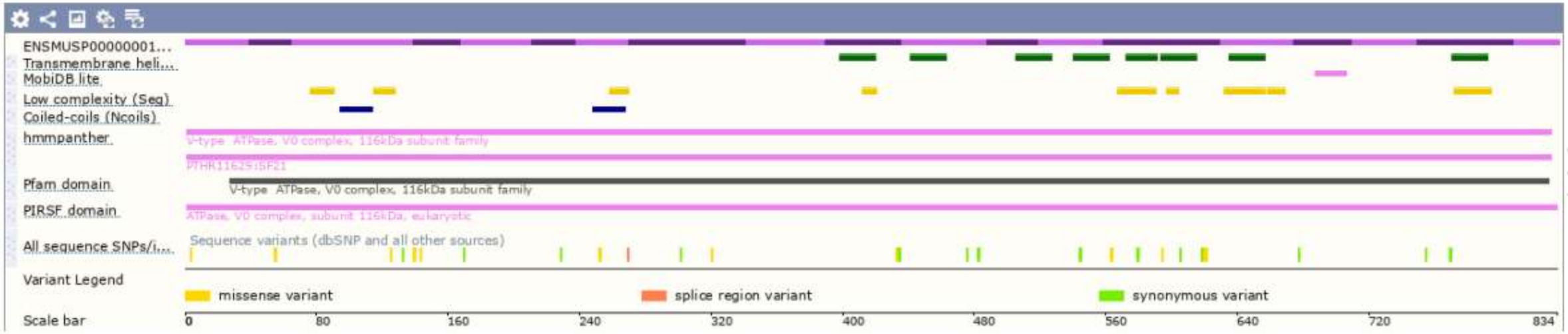

If you have any questions, you are welcome to inquire.
Tel: 025-5864 1534

集萃药康生物科技
GemPharmatech Co.,Ltd

GemPharmatech Co.,Ltd