Zfp536 Cas9-CKO *Strategy*

Designer: **Daohua Xu**

Design Date: **2019-7-18**

GemPharmatech Co.,Ltd

Project Overview

Project Name	***Zfp536***
Project type	**Cas9-CKO**
Strain background	**C57BL/6JGpt**

Conditional Knockout strategy

This model will use CRISPR/Cas9 technology to edit the *Zfp536* gene. The schematic diagram is as follows:

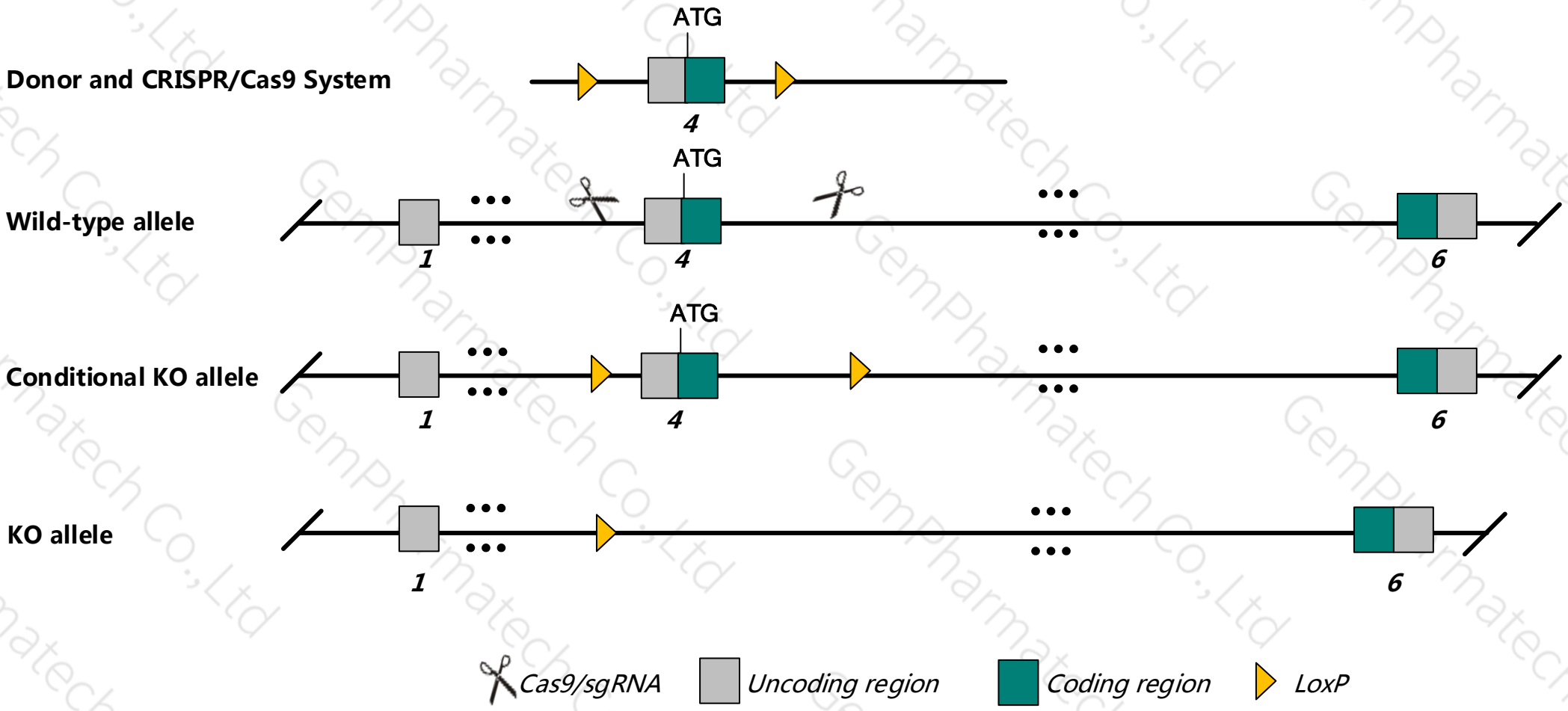

Technical routes

- The *Zfp536* gene has 10 transcripts.According to the structure of *Zfp536* gene, exon4 of *Zfp536*-202 (ENSMUST00000175941.7) transcript is recommended as the knockout region.The region contains start codon ATG.Knock out the region will result in disruption of protein function.

- In this project we use CRISPR/Cas9 technology to modify *Zfp536* gene. The brief process is as follows: sgRNA was transcribed in vitro, donor vector was constructed.Cas9, sgRNA and Donor were microinjected into the fertilized eggs of C57BL/6JGpt mice.Fertilized eggs were transplanted to obtain positive F0 mice which were confirmed by PCR and sequencing. A stable F1 generation mouse model was obtained by mating positive F0 generation mice with C57BL/6JGpt mice.

- The flox mice was knocked out after mating with mice expressing Cre recombinase, resulting in the loss of function of the target gene in specific tissues or cell types.

Notice

- The *Zfp536* gene is located on the Chr7. If the knockout mice are crossed with other mice strains to obtain double gene positive homozygous mouse offspring, please avoid the two genes on the same chromosome.
- This Strategy is designed based on genetic information in existing databases.Due to the complexity of biological processes, all risk of the loxp insertion on gene transcription, RNA splicing and protein translation cannot be predicted at the existing technology level.

Gene information （NCBI）

集萃药康 GemPharmatech

Zfp536 zinc finger protein 536 [*Mus musculus* (house mouse)]

Gene ID: 243937, updated on 8-Dec-2018

Summary

Official Symbol	Zfp536 provided by MGI
Official Full Name	zinc finger protein 536 provided by MGI
Primary source	MGI:MGI:1926102
See related	Ensembl:ENSMUSG00000043456
Gene type	protein coding
RefSeq status	PROVISIONAL
Organism	Mus musculus
Lineage	Eukaryota; Metazoa; Chordata; Craniata; Vertebrata; Euteleostomi; Mammalia; Eutheria; Euarchontoglires; Glires; Rodentia; Myomorpha; Muroidea; Muridae; Murinae; Mus; Mus
Also known as	Znf536; mKIAA0390; 9630010P11Rik
Expression	Biased expression in cerebellum adult (RPKM 1.6), CNS E14 (RPKM 1.5) and 13 other tissues See more
Orthologs	human all

Transcript information（Ensembl）

集萃药康 GemPharmatech

The gene has 10 transcripts, and all transcripts are shown below:

Show/hide columns (1 hidden) Filter

Name	Transcript ID	bp	Protein	Biotype	CCDS	UniProt	RefSeq	Flags
Zfp536-201	ENSMUST00000056338.12	4621	1302aa	Protein coding	CCDS21156	Q8K083	NM_172385 NP_759017	TSL:1 GENCODE basic APPRIS P1
Zfp536-202	ENSMUST00000175941.7	4423	1302aa	Protein coding	CCDS21156	Q8K083	-	TSL:1 GENCODE basic APPRIS P1
Zfp536-206	ENSMUST00000176205.7	4372	1302aa	Protein coding	CCDS21156	Q8K083	-	TSL:1 GENCODE basic APPRIS P1
Zfp536-203	ENSMUST00000176114.7	4341	1302aa	Protein coding	CCDS21156	Q8K083	-	TSL:1 GENCODE basic APPRIS P1
Zfp536-204	ENSMUST00000176129.1	2541	281aa	Protein coding	-	Q3TR09	-	CDS 5' incomplete TSL:1
Zfp536-209	ENSMUST00000176680.7	818	163aa	Protein coding	-	H3BK19	-	CDS 3' incomplete TSL:2
Zfp536-208	ENSMUST00000176534.7	738	120aa	Protein coding	-	H3BKM9	-	CDS 3' incomplete TSL:3
Zfp536-205	ENSMUST00000176137.1	1062	No protein	Processed transcript	-	-	-	TSL:1
Zfp536-210	ENSMUST00000206332.1	1203	No protein	Retained intron	-	-	-	TSL:NA
Zfp536-207	ENSMUST00000176297.1	439	No protein	Retained intron	-	-	-	TSL:2

The strategy is based on the design of *Zfp536*-202 transcript,The transcription is shown below

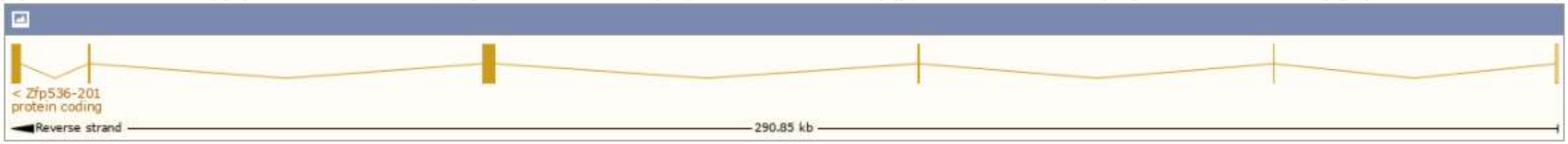

Genomic location distribution

Protein domain

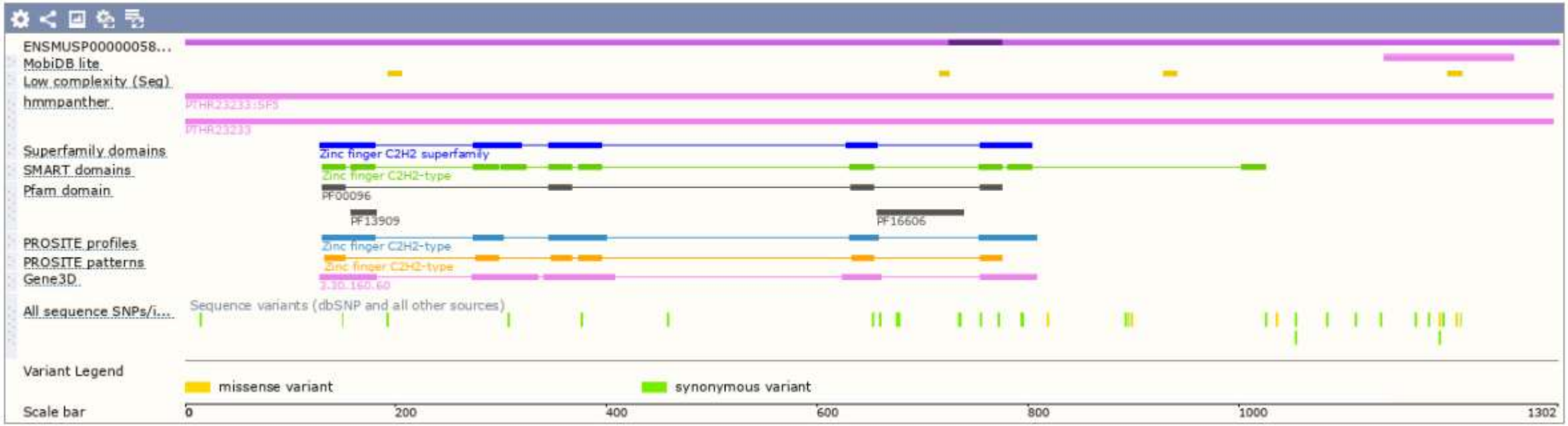

Mouse phenotype description(MGI)

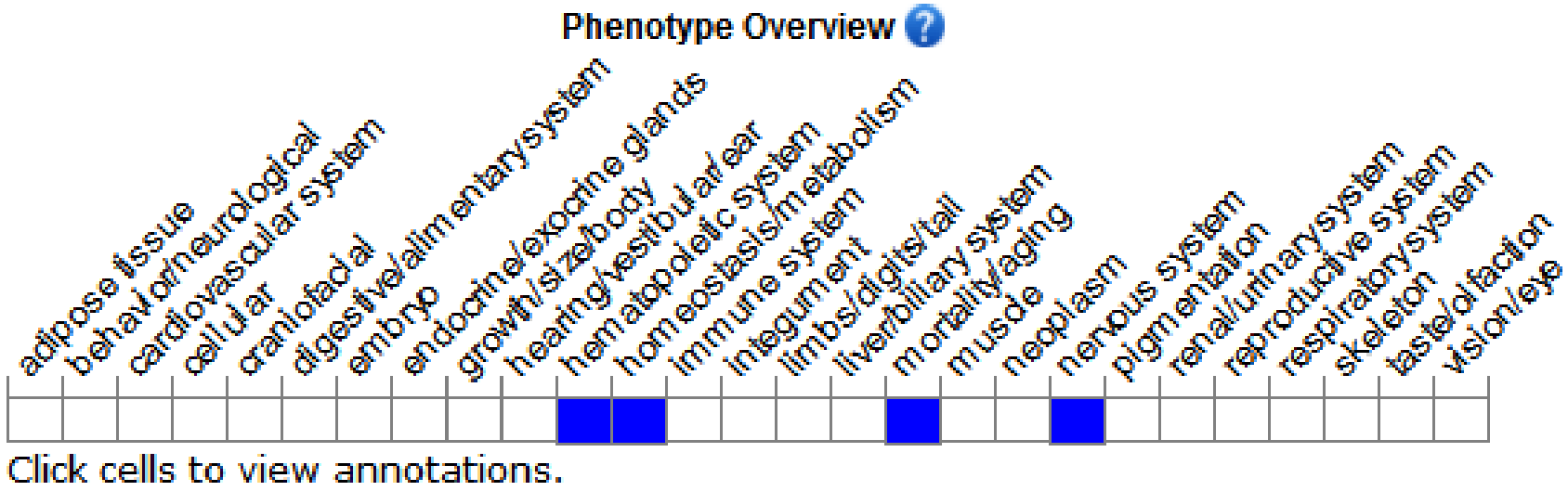

Phenotypes affected by the gene are marked in blue.Data quoted from MGI database(http://www.informatics.jax.org/) .

If you have any questions, you are welcome to inquire.
Tel: 025-5864 1534

集萃药康生物科技
GemPharmatech Co.,Ltd