Sptan1 Cas9-CKO *Strategy*

Designer: Daohua Xu

GemPharmatech Co.,Ltd

Project Overview

Project Name	*Sptan1*
Project type	Cas9-CKO
Animal background	C57BL/6J

Conditional Knockout strategy

This model will use CRISPR/Cas9 technology to edit the *Sptan1* gene. The schematic diagram is as follows:

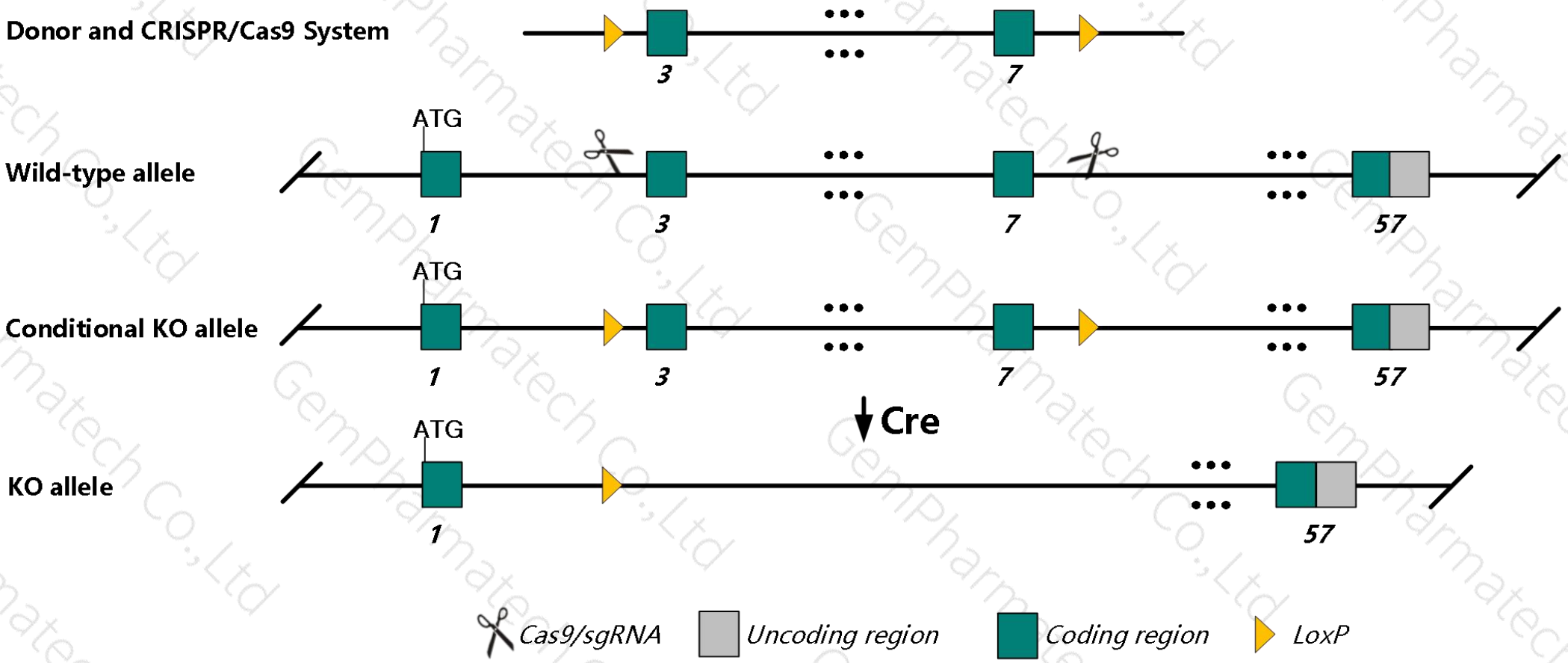

Technical routes

- The *Sptan1* gene has 16 transcripts, According to the structure of *Sptan1* gene, exon3-exon7 of *Sptan1-208* transcript is recommended as the knockout region.The region contains the 722bp coding seqence.Knock out the region,result in destruction of protein.

- This project uses CRISPR/Cas9 technology to modify *Sptan1* gene. The brief process is as follows: sgRNA was transcribed in vitro, donor vector was constructed, Cas9, sgRNA and donor were microinjected into fertilized eggs of C57BL/6J mice and homologous recombination was carried out to obtain F0 mice. A stable and hereditary F1 generation mouse model was obtained by mating F0 generation mice with C57BL/6J mice which were confirmed positive by PCR-sequencing.

- The flox mice was knocked out after mating with mice expressing Cre recombinase, resulting in the loss of function of the target gene in specific tissues and cell types.

Notice

- According to the existing MGI data，Homozygous deletion of the exons encoding the CCC region are normal. Mice homozygous for a gene trap allele exhibit embryonic lethality and abnormal nervous system, heart and craniofacial morphology.

- The *Sptan1* gene is located in the Chr2. If the knockout mice are mixed with other mice, two target genes are avoided on the same chromosome as possible, otherwise the offspring of mice with double gene positive and homozygous gene knockout can not be obtained.

- This Strategy is designed based on genetic information in existing databases. Due to the complexity of gene transcription and translation processes, all risks cannot be predicted under existing information.

Gene information （NCBI）

集萃药康 GemPharmatech

Sptan1 spectrin alpha, non-erythrocytic 1 [*Mus musculus* (house mouse)]

Gene ID: 20740, updated on 3-Jan-2019

Summary

Official Symbol	Sptan1 provided by MGI
Official Full Name	spectrin alpha, non-erythrocytic 1 provided by MGI
Primary source	MGI:MGI:98386
See related	Ensembl:ENSMUSG00000057738
Gene type	protein coding
RefSeq status	VALIDATED
Organism	Mus musculus
Lineage	Eukaryota; Metazoa; Chordata; Craniata; Vertebrata; Euteleostomi; Mammalia; Eutheria; Euarchontoglires; Glires; Rodentia; Myomorpha; Muroidea; Muridae; Murinae; Mus; Mus
Also known as	Spna2; Spna-2; 2610027H02Rik
Expression	Broad expression in CNS E18 (RPKM 112.4), cerebellum adult (RPKM 102.7) and 24 other tissues See more
Orthologs	human all

Transcript information （Ensembl）

The gene has 16 transcripts, and all transcripts are shown below：

Show/hide columns (1 hidden) Filter

Name	Transcript ID	bp	Protein	Biotype	CCDS	UniProt	RefSeq	Flags
Sptan1-204	ENSMUST00000113717.7	7958	2457aa	Protein coding	CCDS50559	A3KGU5	NM_001177668 NP_001171139	TSL:1 GENCODE basic
Sptan1-203	ENSMUST00000100225.8	7892	2477aa	Protein coding	CCDS50558	A3KGU7	NM_001177667 NP_001171138	TSL:1 GENCODE basic APPRIS ALT1
Sptan1-208	ENSMUST00000129241.2	7585	2498aa	Protein coding	CCDS38094	A3KGU9	NM_001309460 NP_001296389	TSL:5 GENCODE basic APPRIS P3
Sptan1-205	ENSMUST00000113719.8	8018	2478aa	Protein coding	-	E9Q447	-	TSL:5 GENCODE basic
Sptan1-202	ENSMUST00000095083.10	7883	2472aa	Protein coding	-	P16546	-	TSL:5 GENCODE basic APPRIS ALT1
Sptan1-201	ENSMUST00000046257.13	7820	2452aa	Protein coding	-	P16546	-	TSL:5 GENCODE basic APPRIS ALT1
Sptan1-206	ENSMUST00000113741.7	781	219aa	Protein coding	-	A3KGU4	-	CDS 3' incomplete TSL:5
Sptan1-210	ENSMUST00000143918.7	3735	No protein	Retained intron	-	-	-	TSL:2
Sptan1-215	ENSMUST00000202286.1	1471	No protein	Retained intron	-	-	-	TSL:NA
Sptan1-211	ENSMUST00000149038.2	1025	No protein	Retained intron	-	-	-	TSL:5
Sptan1-213	ENSMUST00000152453.2	814	No protein	Retained intron	-	-	-	TSL:5
Sptan1-212	ENSMUST00000149846.1	800	No protein	Retained intron	-	-	-	TSL:3
Sptan1-214	ENSMUST00000201758.1	719	No protein	Retained intron	-	-	-	TSL:2
Sptan1-209	ENSMUST00000131827.2	570	No protein	Retained intron	-	-	-	TSL:3
Sptan1-216	ENSMUST00000202844.1	477	No protein	Retained intron	-	-	-	TSL:5
Sptan1-207	ENSMUST00000124494.4	457	No protein	Retained intron	-	-	-	TSL:3

The strategy is based on the design of *Sptan1-208* transcript,The transcription is shown below：

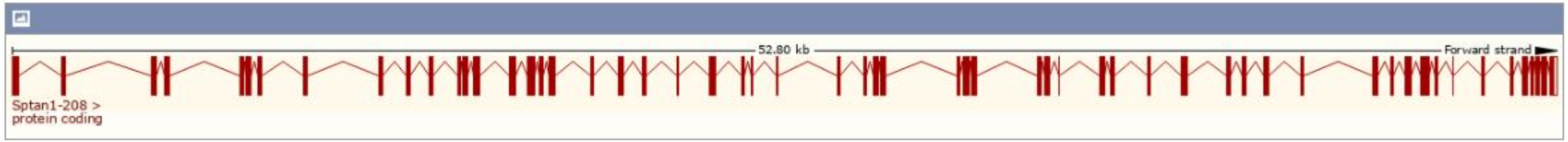

Genomic location distribution

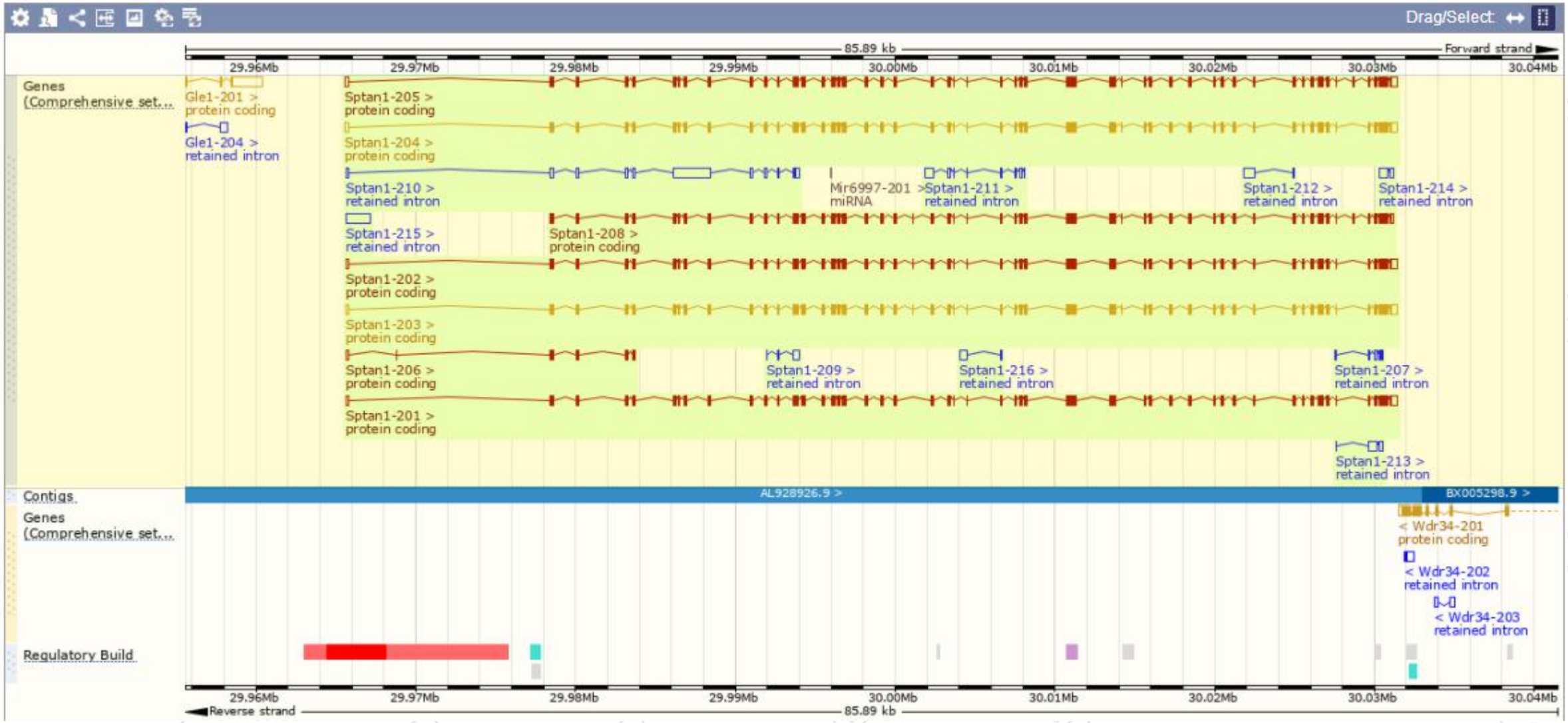

Protein domain

If you have any questions, you are welcome to inquire.
Tel: 025-5864 1534

集萃药康生物科技
GemPharmatech Co.,Ltd