Scnn1a-P2A-iCre Cas9-KI Strategy

Designer:	**Yanhua Shen**
Reviwer	**Xueting Zhang**
Design Date:	**2021-09-15**

GemPharmatech Co.,Ltd

Project Overview

Project Name	**Scnn1a-P2A-iCre**
Project type	**Cas9-KI**
Strain background	**C57BL/6JGpt**

Knockin strategy

This model will use CRISPR/Cas9 technology to edit the *Scnn1a* gene. The schematic diagram is as follows:

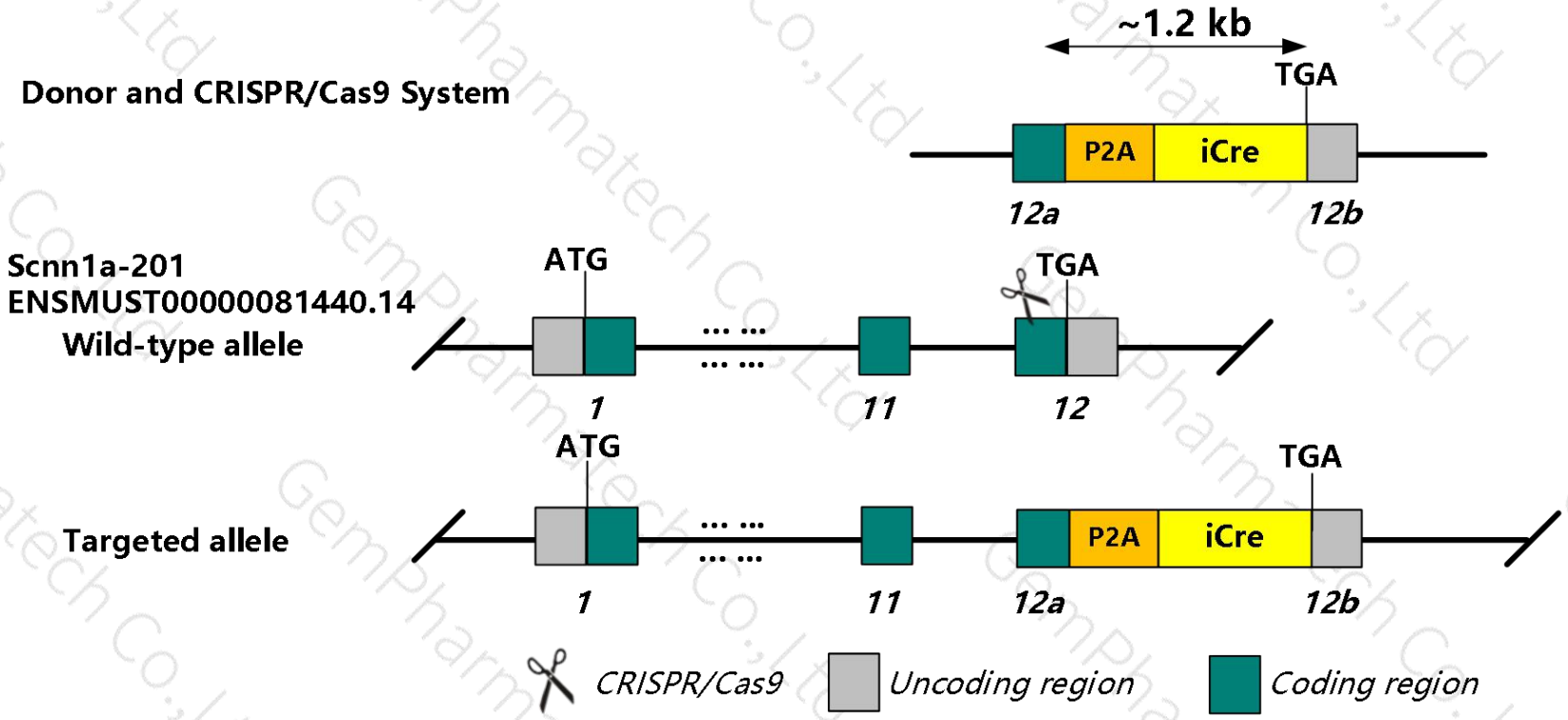

Technical routes

- The *Scnn1a* gene has 7 transcripts. According to the reference and structure of *Scnn1a* gene, *Scnn1a-201*(ENSMUST00000081440.14) is selected for presentation of the recommended strategy.

- *Scnn1a-201* gene has 12 exons, with the ATG start codon in exon1 and TGA stop codon in exon12.

- We make *Scnn1a-P2A-iCre* knockin mice via CRISPR/Cas9 system. CRISPR/Cas9 system and donor will be co-injected into zygotes. Cas9 endonuclease cleavage near stop codon(TGA) of exon12 of *Scnn1a* gene, and create a DSB(double-strand break). Such breaks will be repaired, and result in P2A-iCre before stop coding(TGA) of *Scnn1a* gene by homologous recombination. The pups will be genotyped by PCR, followed by sequence analysis.

Notice

- According to the existing MGI data, homozygotes for targeted null mutations exhibit skin with epithelial hyperplasia, abnormal nuclei, premature lipid secretion, and abnormal keratohyaline granules. Mutants die within 40 hours of birth due to inability to clear their lungs of liquid.
- This mice express Cre recombinase from the mouse Scnn1a promoter in subgroups of brain tissues.
- The expression of two genes linked with P2A peptide is drived by the same promoter, and the fused protein will be cleaved into two proteins folding independently, while the former will carry the P2A-translated polypeptide.
- There will be 1 to 2 amino acid synonymous mutation in exon12 of Scnn1a gene in this strategy..
- The *Scnn1a* gene is located on the Chr6. If the knockin mice are crossed with other mice strains to obtain double gene positive homozygous mouse offspring, please avoid the two genes on the same chromosome.
- The scheme is designed according to the genetic information in the existing database. Inserting a foreign gene after the gene coding region may affect the expression of endogenous and foreign genes. Due to the complex process of gene transcription and translation, it cannot be predicted completely at the present technology level.

Gene information （NCBI）

集萃药康 GemPharmatech

Scnn1a sodium channel, nonvoltage-gated 1 alpha [*Mus musculus* (house mouse)]

Download Datasets

Gene ID: 20276, updated on 23-Jun-2021

Summary

Official Symbol	Scnn1a provided by MGI
Official Full Name	sodium channel, nonvoltage-gated 1 alpha provided by MGI
Primary source	MGI:MGI:101782
See related	Ensembl:ENSMUSG00000030340
Gene type	protein coding
RefSeq status	VALIDATED
Organism	Mus musculus
Lineage	Eukaryota; Metazoa; Chordata; Craniata; Vertebrata; Euteleostomi; Mammalia; Eutheria; Euarchontoglires; Glires; Rodentia; Myomorpha; Muroidea; Muridae; Murinae; Mus; Mus
Also known as	Sc; mEN; ENaC; SCNEA; Scnn1; mENaC
Expression	Biased expression in lung adult (RPKM 90.9), colon adult (RPKM 43.3) and 8 other tissues See more
Orthologs	human all

NEW **Try the new Gene table**
Try the new Transcript table

Genomic context

Location: 6 F3; 6 59.32 cM

See Scnn1a in Genome Data Viewer

Exon count: 15

Chromosome 6 - NC_000072.7

Transcript information（Ensembl）

The gene has 7 transcripts, and all transcripts are shown below：

Name	Transcript ID	bp	Protein	Biotype	CCDS	UniProt Match	Flags
Scnn1a-201	ENSMUST00000081440.14	3499	700aa	Protein coding	CCDS39641	Q3USG4	GENCODE basic APPRIS P2 TSL:1
Scnn1a-202	ENSMUST00000175966.8	2154	275aa	Nonsense mediated decay	-	H3BKW1	TSL:5
Scnn1a-203	ENSMUST00000176110.8	3494	674aa	Protein coding	-	H3BJC3	GENCODE basic APPRIS ALT2 TSL:5
Scnn1a-204	ENSMUST00000176365.2	560	143aa	Protein coding	-	H3BKP2	TSL:5 CDS 3' incomplete
Scnn1a-205	ENSMUST00000176442.8	2323	591aa	Protein coding	-	H3BKC4	TSL:5 CDS 3' incomplete
Scnn1a-206	ENSMUST00000176655.8	3354	593aa	Protein coding	-	H3BLI2	GENCODE basic TSL:5
Scnn1a-207	ENSMUST00000177329.2	2807	674aa	Protein coding	-	H3BJC3	GENCODE basic APPRIS ALT2 TSL:5

The strategy is based on the design of *Scnn1a-201* transcript,the transcription is shown below

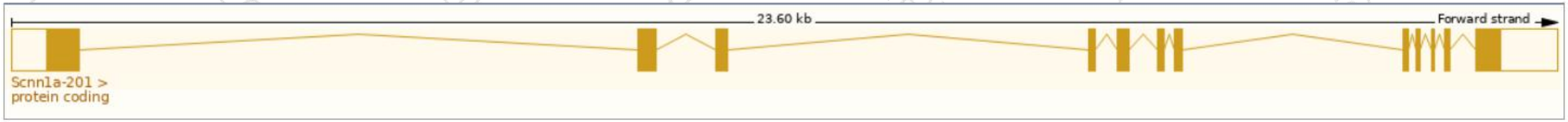

Genomic location distribution

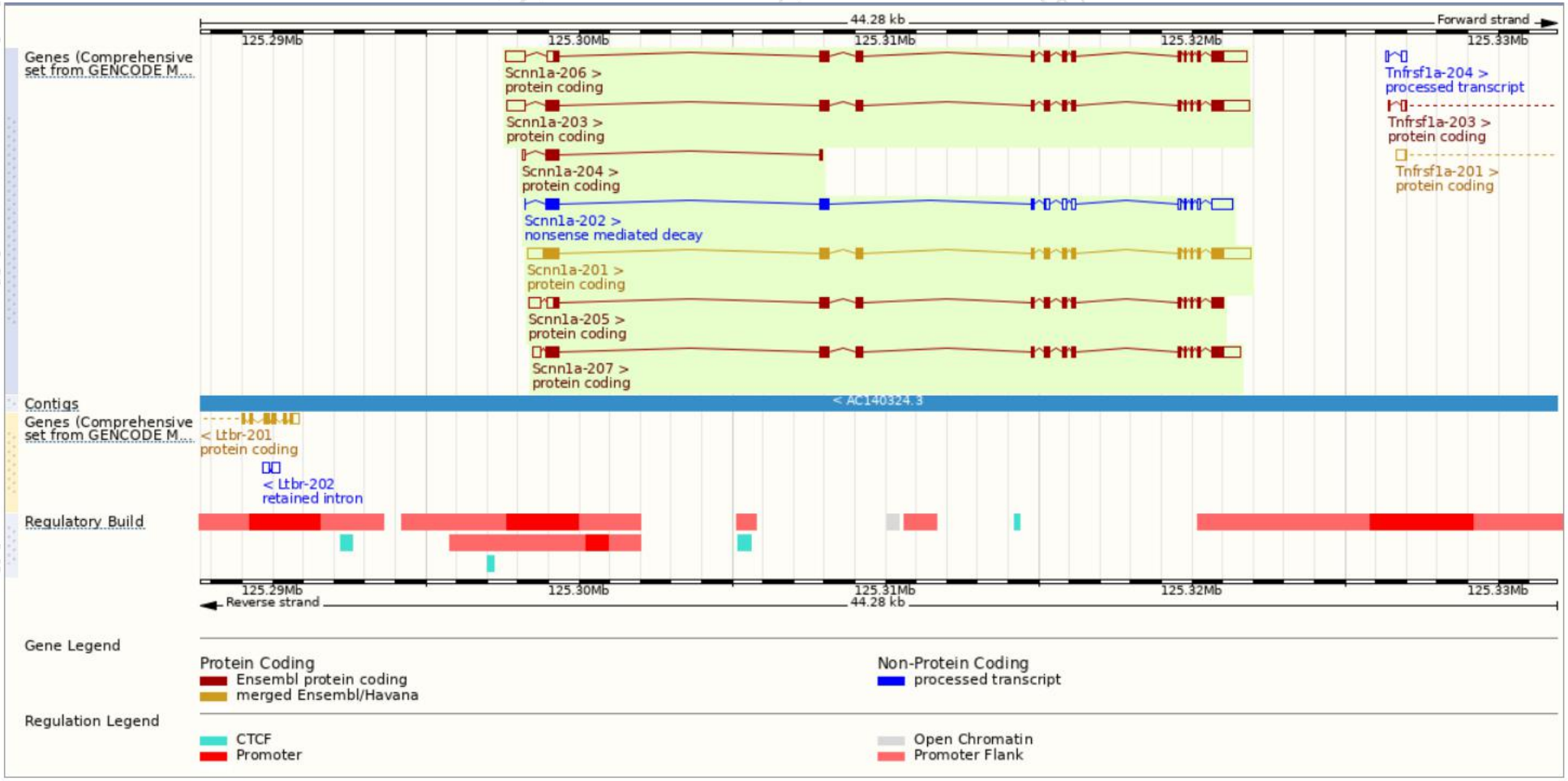

Protein domain

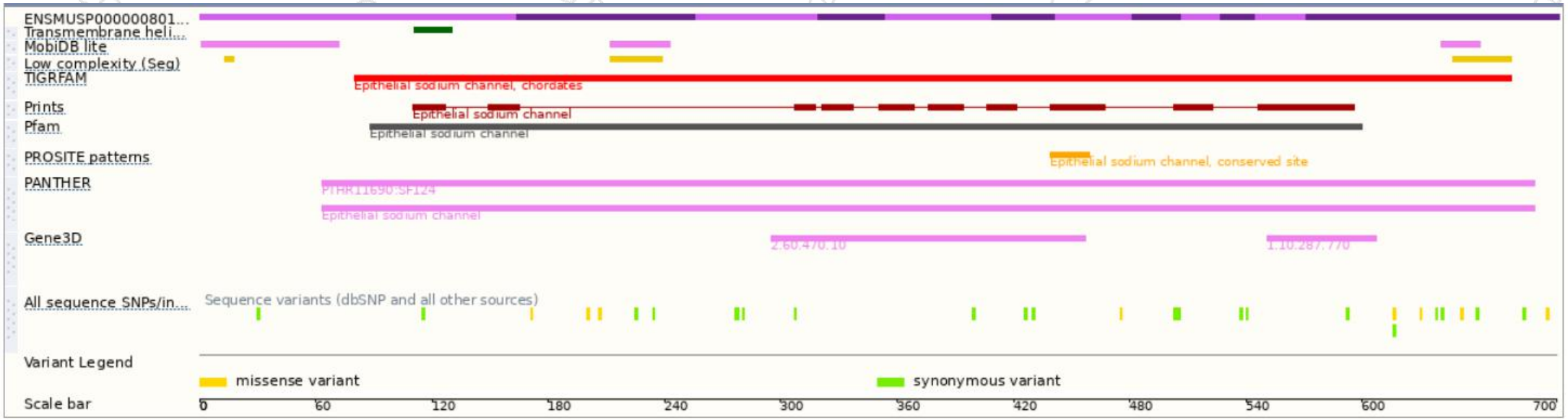

Mouse phenotype description(MGI)

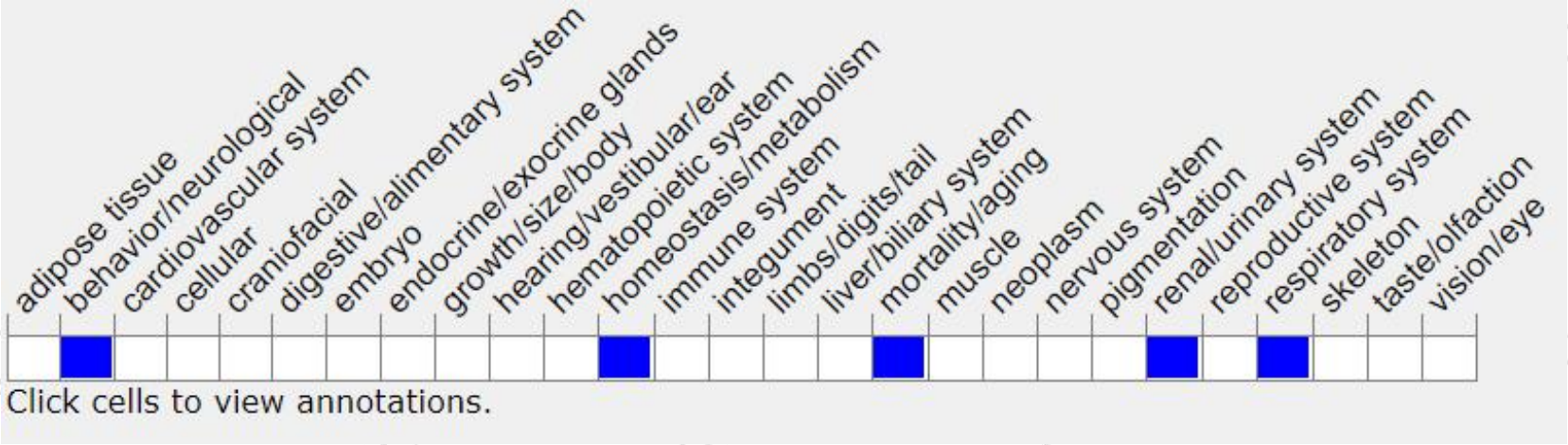

Phenotypes affected by the gene are marked in blue.Data quoted from MGI database(http://www.informatics.jax.org/marker/MGI:101782) .

Homozygotes for targeted null mutations exhibit skin with epithelial hyperplasia, abnormal nuclei, premature lipid secretion, and abnormal keratohyaline granules. Mutants die within 40 hours of birth due to inability to clear their lungs of liquid.

If you have any questions, you are welcome to inquire.
Tel: 025-5864 1534

集萃药康生物科技
GemPharmatech Co.,Ltd