Ctnnb1-S715A Mouse Model Strategy

-CRISPR/Cas9 technology

Designer: Yanhua Shen

Reviewer: Xueting Zhang

Design Date: 2021-01-19

GemPharmatech Co.,Ltd

Project Overview

Project Name	**Ctnnb1-S715A**
Project type	**cas9-ki(PM)**
Strain background	**C57BL/6JGpt**

Technical Description

- The mouse *Ctnnb1* gene has 15 transcripts.
- This project produced *Ctnnb1*-S715A point mutation on exon 15 of the transcript of *Ctnnb1*-201(ENSMUST00000007130.14). The 715th amino acid will be mutated from S to A, and the corresponding nuclearinic acid will be mutated to GCC from the AGC.
- In this project, *Ctnnb1* gene will be modified by CRISPR/Cas9 technology. The brief process is as follows: In vitro, sgRNA and donor vectors were constructed. Cas9, sgRNA and donor were injected into the fertilized eggs of C57BL/6JGpt mice for homologous recombination, and obtained positive F0 mice identified by PCR and sequencing analysis. The stable inheritable positive F1 mice model was obtained by mating F0 mice with C57BL/6JGpt mice.

Mutation Site

集萃药康 GemPharmatech

Before mutation

```
     +2                                                                                                                                                                                                                P  S?
50001   AGAAAGCAGT GTTCCTGGCA AGATGTCCTT ACCACAGTTA ATCAGTCTCT CCTCTTTCCT TTGCCCATCT TGTGGACACC CTGACTCCTA CAGATCCCAG
        TCTTTCGTCA CAAGGACCGT TCTACAGGAA TGGTGTCAAT TAGTCAGAGA GGAGAAAGGA AACGGGTAGA ACACCTGTGG GACTGAGGAT GTCTAGGGTC
     +2 ?S Y  R  S  F  H  S  G  G  Y  G  Q  D  A  L  G  M  D  P  M  M  E  H  E  M  G  G  H  H  P  G  A  D  Y
50101   CTACCGTTCT TTTCACTCTG GTGGATACGG CCAGGATGCC TTGGGGATGG ACCCTATGAT GGAGCATGAG ATGGGTGGCC ACCACCCTGG TGCTGACTAT
        GATGGCAAGA AAAGTGAGAC CACCTATGCC GGTCCTACGG AACCCCTACC TGGGATACTA CCTCGTACTC TACCCACCGG TGGTGGGACC ACGACTGATA
```

After mutation

```
     +1                                                                                                                                                                                                                P  A?
50001   AGAAAGCAGT GTTCCTGGCA AGATGTCCTT ACCACAGTTA ATCAGTCTCT CCTCTTTCCT TTGCCCATCT TGTGGACACC CTGACTCCTA CAGATCCCGC
        TCTTTCGTCA CAAGGACCGT TCTACAGGAA TGGTGTCAAT TAGTCAGAGA GGAGAAAGGA AACGGGTAGA ACACCTGTGG GACTGAGGAT GTCTAGGGCG
     +1 ?A Y  R  S  F  H  S  G  G  Y  G  Q  D  A  L  G  M  D  P  M  M  E  H  E  M  G  G  H  H  P  G  A  D  Y
50101   CTACCGTTCT TTTCACTCTG GTGGATACGG CCAGGATGCC TTGGGGATGG ACCCTATGAT GGAGCATGAG ATGGGTGGCC ACCACCCTGG TGCTGACTAT
        GATGGCAAGA AAAGTGAGAC CACCTATGCC GGTCCTACGG AACCCCTACC TGGGATACTA CCTCGTACTC TACCCACCGG TGGTGGGACC ACGACTGATA
```

The green region is exon 15 of *Ctnnb1-201,* and the yellow region represents the S715A mutation site.

Strategy

This model uses CRISPR/Cas9 technology to edit the *Ctnnb1* gene and the schematic diagram is as follow:

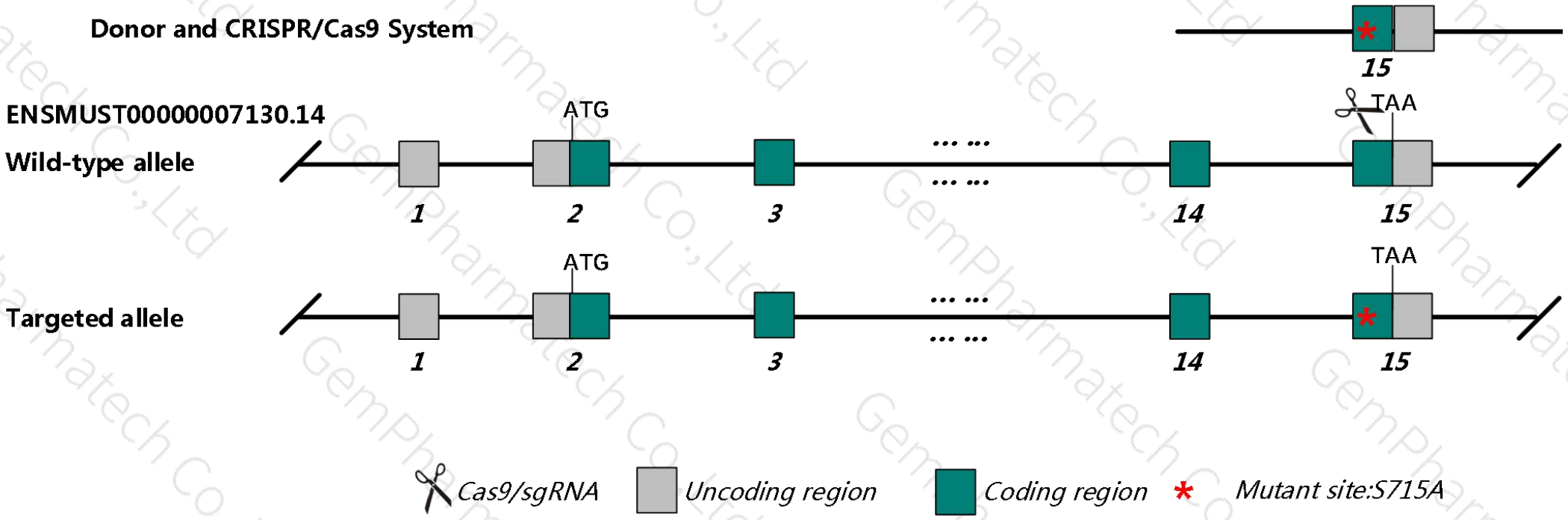

Notice

- According to the existing MGI data, homozygous null embryos show anterior-posterior axis formation anomalies, but develop to E7. Multiple conditional mutations have shown defects in distinct stem cell types that result in proliferation defects, such as intestinal polyps, brain and spinal cord size anomalies, etc.
- One or two synonymous mutations of amino acids will be intronduced on exon15 of *Ctnnb1*.
- The *Ulk4*-210 is overlaped with the mutation site,the effect is unknown.
- The effect of transcript 203,205,207,212 is unknown
- Mouse *Ctnnb1* gene is located on Chr9. Please take the loci in consideration when breeding this mutation mice with other gene modified strains, if the other gene is also on Chr9, it may be extremely hard to get double gene positive homozygotes.
- The scheme is designed according to the genetic information in the existing database. Due to the complex process of gene transcription and translation, it cannot be predicted completely at the present technology level.

Gene name and location（NCBI）

集萃药康 GemPharmatech

Ctnnb1 catenin (cadherin associated protein), beta 1 [*Mus musculus* (house mouse)]

Download Datasets

Gene ID: 12387, updated on 10-Jan-2021

Summary

Official Symbol	Ctnnb1 provided by MGI
Official Full Name	catenin (cadherin associated protein), beta 1 provided by MGI
Primary source	MGI:MGI:88276
See related	Ensembl:ENSMUSG00000006932
Gene type	protein coding
RefSeq status	REVIEWED
Organism	Mus musculus
Lineage	Eukaryota; Metazoa; Chordata; Craniata; Vertebrata; Euteleostomi; Mammalia; Eutheria; Euarchontoglires; Glires; Rodentia; Myomorpha; Muroidea; Muridae; Murinae; Mus; Mus
Also known as	Bfc; Cat; Mesc; Catnb
Summary	This gene encodes not only an important cytoplasmic component of the classical cadherin adhesion complex that forms the adherens junction in epithelia and mediates cell-cell adhesion in many other tissues but also a key signaling molecule in the canonical Wnt signaling pathway that controls cell growth and differentiation during both normal development and tumorigenesis. The gene product contains a central armadillo-repeat containing domain through which it binds the cytoplasmic tail of classical cadherins; meanwhile, it also binds alpha-catenin, which further links the cadherin complex to the actin cytoskeleton either directly or indirectly. Beta-catenin is therefore necessary for the adhesive function of classical cadherins. Another key function of this protein is to mediate the canonical Wnt signaling pathway and regulate gene transcription. Without Wnt signal, cytoplasmic beta-catenin that is not associated with the cadherin complex is quickly phosphorylated at the N-terminal Ser/Thr residues by the so called degradation complex containing axin, adenomatous polyposis coli (APC), casein kinase I, and GSK3B, then ubiquitylated by beta-TrCP, and degraded by the proteasome. However, in the presence of Wnt signal, the degradation complex is disrupted and the stabilized cytoplasmic beta-catenin translocates into the nucleus, where it binds various transcription factors and, together with these factors, regulates the transcription of many downstream genes. Mutations of this gene have been linked with various types of tumors. Alternatively spliced variants have been found for this gene. [provided by RefSeq, Sep 2009]
Expression	Ubiquitous expression in CNS E11.5 (RPKM 116.8), limb E14.5 (RPKM 110.5) and 28 other tissues See more
Orthologs	human all

Transcript information（Ensembl）

The gene has 15 transcripts, and all transcripts are shown below:

Name	Transcript ID	bp	Protein	Biotype	CCDS	UniProt Match	Flags
Ctnnb1-201	ENSMUST00000007130.14	3623	781aa	Protein coding	CCDS23630	Q02248	TSL:1 GENCODE basic APPRIS P1
Ctnnb1-202	ENSMUST00000126633.1	494	No protein	Retained intron	-	-	TSL:2
Ctnnb1-203	ENSMUST00000130466.7	364	42aa	Protein coding	-	D3Z7S6	CDS 3' incomplete TSL:3
Ctnnb1-204	ENSMUST00000130845.8	795	83aa	Nonsense mediated decay	-	D3Z5Q1	TSL:5
Ctnnb1-205	ENSMUST00000133689.1	886	174aa	Protein coding	-	F7CRC6	CDS 5' incomplete TSL:2
Ctnnb1-206	ENSMUST00000139138.1	577	No protein	Retained intron	-	-	TSL:1
Ctnnb1-207	ENSMUST00000145093.1	714	174aa	Protein coding	-	D3YUH4	CDS 3' incomplete TSL:3
Ctnnb1-208	ENSMUST00000154356.7	3548	607aa	Nonsense mediated decay	-	E9Q6A9	TSL:5
Ctnnb1-209	ENSMUST00000154687.7	2359	No protein	Retained intron	-	-	TSL:1
Ctnnb1-210	ENSMUST00000156911.1	773	No protein	Retained intron	-	-	TSL:2
Ctnnb1-211	ENSMUST00000163844.7	2222	90aa	Nonsense mediated decay	-	E9PW26	TSL:5
Ctnnb1-212	ENSMUST00000169931.7	505	169aa	Protein coding	-	F7BAC9	CDS 5' and 3' incomplete TSL:3
Ctnnb1-213	ENSMUST00000170729.1	692	145aa	Nonsense mediated decay	-	F6QZ47	CDS 5' incomplete TSL:5
Ctnnb1-214	ENSMUST00000178812.8	2702	781aa	Protein coding	CCDS23630	Q02248	TSL:1 GENCODE basic APPRIS P1
Ctnnb1-215	ENSMUST00000215573.1	1292	No protein	Retained intron	-	-	TSL:NA

The strategy is based on the design of *Ctnnb1-201* transcript, the transcription is shown below:

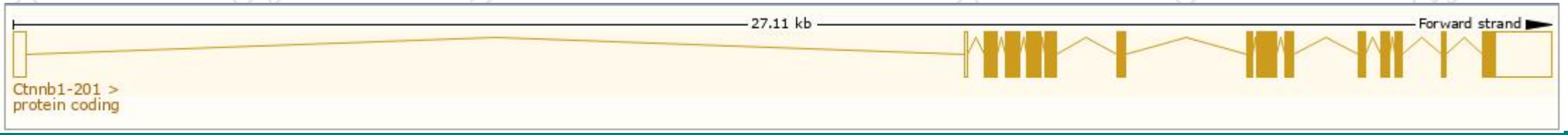

Genomic location distribution

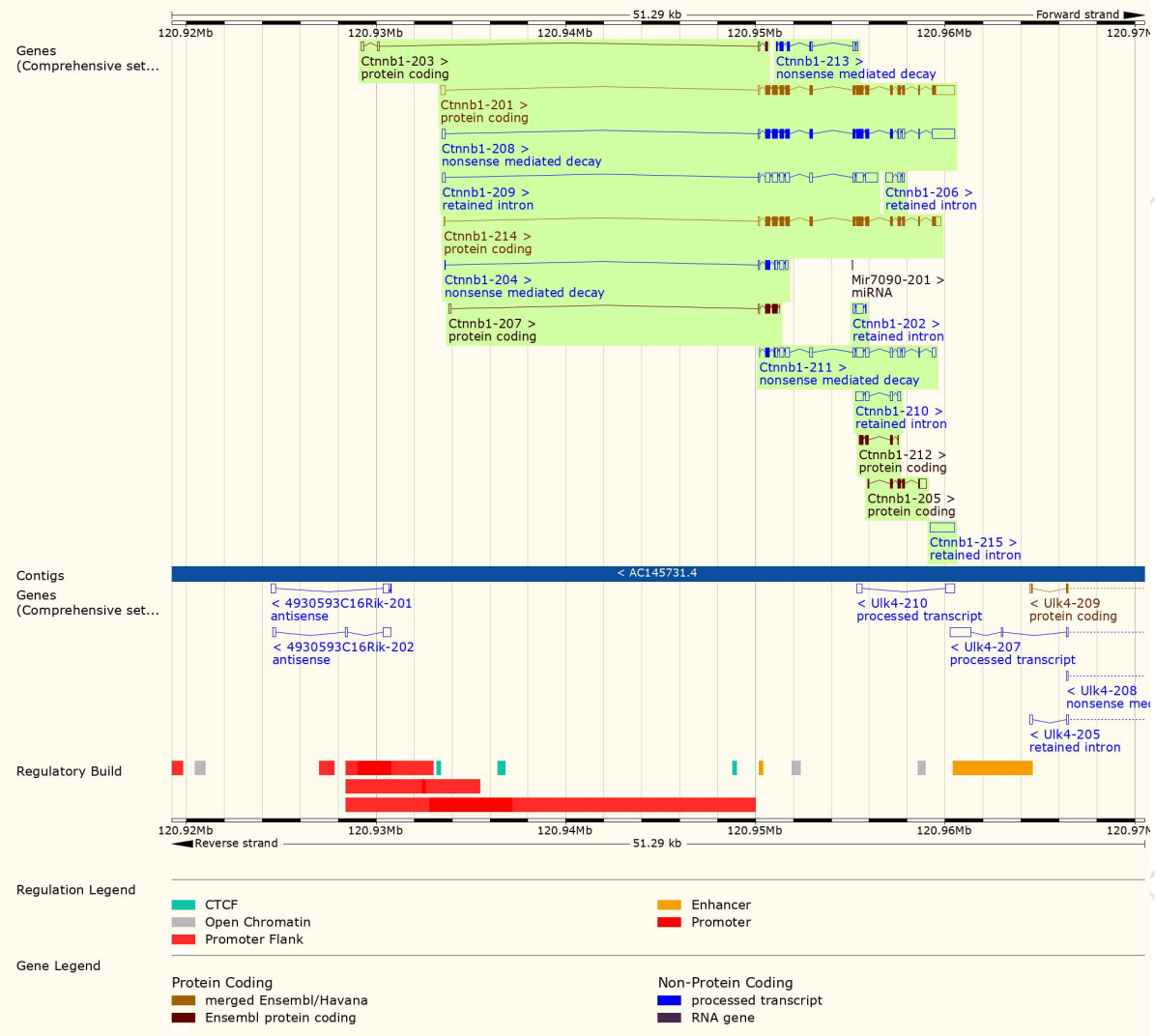

Protein domain

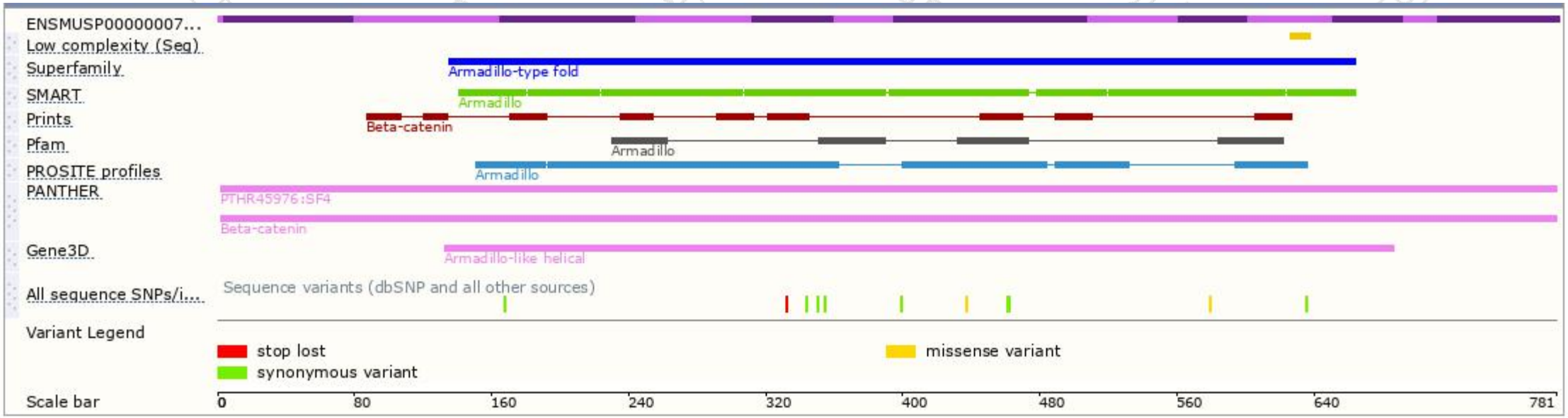

Mouse phenotype description(MGI)

URL link is as follows:
http://www.informatics.jax.org/marker/MGI:88276

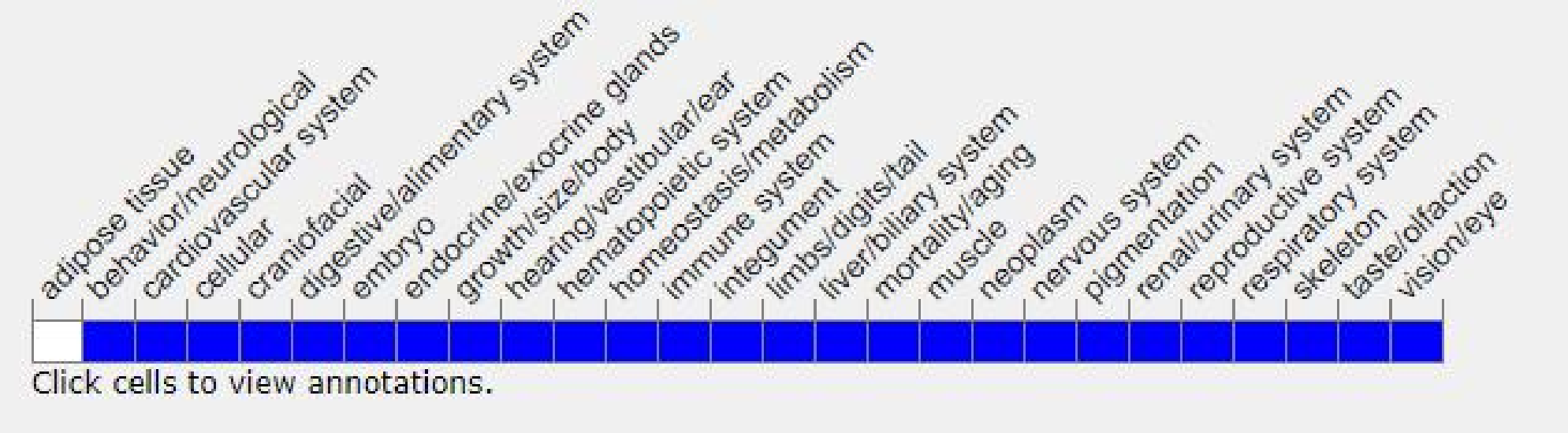

According to the existing MGI data, homozygous null embryos show anterior-posterior axis formation anomalies, but develop to E7. Multiple conditional mutations have shown defects in distinct stem cell types that result in proliferation defects, such as intestinal polyps, brain and spinal cord size anomalies, etc.

If you have any questions, please feel free to contact us.
Tel: 025-5864 1534

集萃药康生物科技
GemPharmatech Co.,Ltd

GemPharmatech Co.,Ltd