Rab5a-F57A Mouse Model Strategy

-CRISPR/Cas9 technology

Designer: Yanhua Shen

Reviewer: Xueting Zhang

Design Date: 2020-11-10

GemPharmatech Co.,Ltd

Project Overview

Project Name	**Rab5a-F57A**
Project type	**cas9-ki(PM)**
Strain background	**C57BL/6JGpt**

Technical Description

- The mouse *Rab5a* gene has 2 transcripts.
- This project produced *Rab5a*-F57A point mutation on exon 3 of the transcript of *Rab5a*-201(ENSMUST00000017975.6). The 57th amino acid will be mutated from F to A, and the corresponding nuclearinic acid will be mutated to GCC from the TTT.
- In this project, *Rab5a* gene will be modified by CRISPR/Cas9 technology. The brief process is as follows: In vitro, sgRNA and donor vectors were constructed. Cas9, sgRNA and donor were injected into the fertilized eggs of C57BL/6JGpt mice for homologous recombination, and obtained positive F0 mice identified by PCR and sequencing analysis. The stable inheritable positive F1 mice model was obtained by mating F0 mice with C57BL/6JGpt mice.

Mutation Site

集萃药康 GemPharmatech

Before mutation

```
     +1                                                                                                                                                                                                                A   F?
38201   AGTGAATTTC AGGTCAGCCT GGCCTTCATG GTTTTTTTTT TTTTTTTAAG TTGAAAAAAA GGATAAACTT ACTATAGATA TTTTCTTTTT CAGCTGCCTT
        TCACTTAAAG TCCAGTCGGA CCGGAAGTAC CAAAAAAAAA AAAAAAATTC AACTTTTTTT CCTATTTGAA TGATATCTAT AAAAGAAAAA GTCGACGGAA
     +1 ?F L  T  Q  T  V  C  L  D  D  T  T  V  K  F  E  I  W  D  T  A  G  Q  E  R  Y  H  S  L  A  P  M  Y  Y
38301   TCTAACCCAA ACTGTGTGTC TTGATGACAC AACAGTAAAA TTTGAAATAT GGGATACAGC TGGTCAAGAA CGGTATCATA GCTTAGCACC AATGTACTAC
        AGATTGGGTT TGACACACAG AACTACTGTG TTGTCATTTT AAACTTTATA CCCTATGTCG ACCAGTTCTT GCCATAGTAT CGAATCGTGG TTACATGATG
```

After mutation

```
     +1                                                                                                                                                                                                                A   A?
38201   AGTGAATTTC AGGTCAGCCT GGCCTTCATG GTTTTTTTTT TTTTTTTAAG TTGAAAAAAA GGATAAACTT ACTATAGATA TTTTCTTTTT CAGCTGCCGC
        TCACTTAAAG TCCAGTCGGA CCGGAAGTAC CAAAAAAAAA AAAAAAATTC AACTTTTTTT CCTATTTGAA TGATATCTAT AAAAGAAAAA GTCGACGGCG
     +1 ?A L  T  Q  T  V  C  L  D  D  T  T  V  K  F  E  I  W  D  T  A  G  Q  E  R  Y  H  S  L  A  P  M  Y  Y
38301   CCTAACCCAA ACTGTGTGTC TTGATGACAC AACAGTAAAA TTTGAAATAT GGGATACAGC TGGTCAAGAA CGGTATCATA GCTTAGCACC AATGTACTAC
        GGATTGGGTT TGACACACAG AACTACTGTG TTGTCATTTT AAACTTTATA CCCTATGTCG ACCAGTTCTT GCCATAGTAT CGAATCGTGG TTACATGATG
```

The green region is exon 3 of *Rab5a-201,* and the yellow region represents the F57A mutation site.

Strategy

This model uses CRISPR/Cas9 technology to edit the *Rab5a* gene and the schematic diagram is as follow:

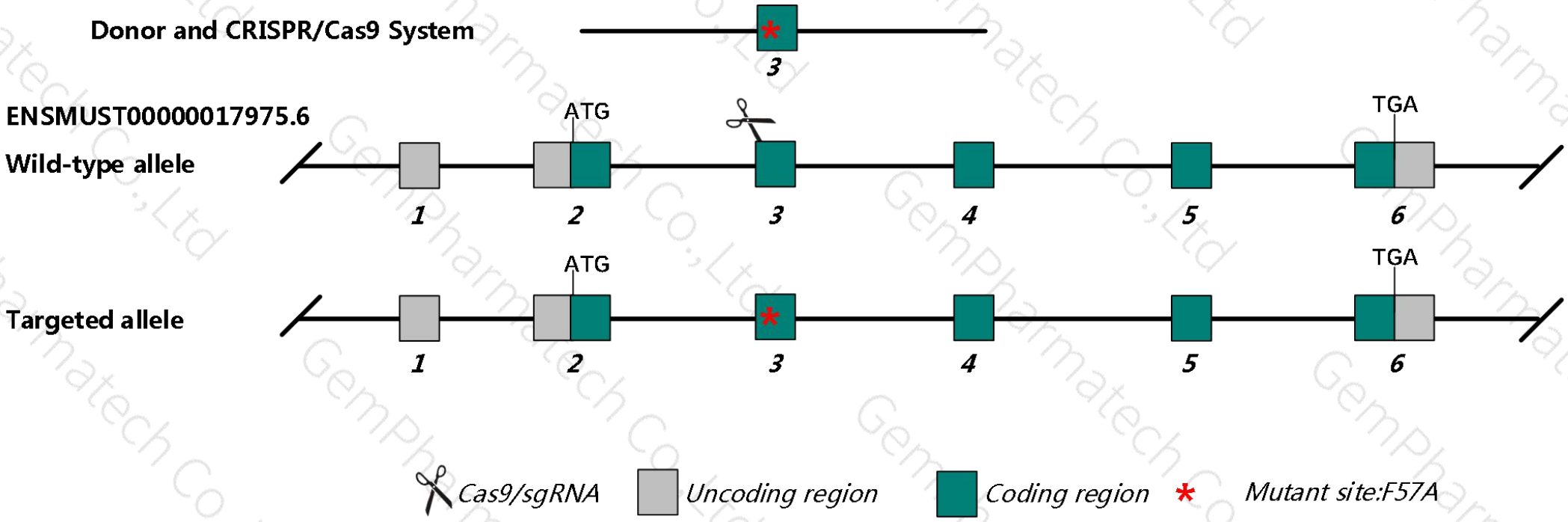

Notice

- One or two synonymous mutations of amino acids will be intronduced on exon3 of *Rab5a*.
- The *Gm49915*-201 is overlaped with the mutation site,the effect is unknown.
- There are less sgRNA available.
- Mouse *Rab5a* gene is located on Chr17. Please take the loci in consideration when breeding this mutation mice with other gene modified strains, if the other gene is also on Chr17, it may be extremely hard to get double gene positive homozygotes.
- The scheme is designed according to the genetic information in the existing database. Due to the complex process of gene transcription and translation, it cannot be predicted completely at the present technology level.

Gene name and location（NCBI）

集萃药康 GemPharmatech

Rab5a RAB5A, member RAS oncogene family [*Mus musculus* (house mouse)]

Gene ID: 271457, updated on 25-Sep-2020

Summary

Official Symbol	Rab5a provided by MGI
Official Full Name	RAB5A, member RAS oncogene family provided by MGI
Primary source	MGI:MGI:105926
See related	Ensembl:ENSMUSG00000017831
Gene type	protein coding
RefSeq status	PROVISIONAL
Organism	Mus musculus
Lineage	Eukaryota; Metazoa; Chordata; Craniata; Vertebrata; Euteleostomi; Mammalia; Eutheria; Euarchontoglires; Glires; Rodentia; Myomorpha; Muroidea; Muridae; Murinae; Mus; Mus
Also known as	AI663973; AU021172; nnyRab5a; 2410015H04Rik
Expression	Broad expression in CNS E11.5 (RPKM 27.6), CNS E18 (RPKM 24.0) and 25 other tissues See more
Orthologs	human all

Genomic context

Location: 17 C; 17 27.82 cM

See Rab5a in Genome Data Viewer

Exon count: 6

Transcript information（Ensembl）

The gene has 2 transcripts, and all transcripts are shown below:

Name	Transcript ID	bp	Protein	Biotype	CCDS	UniProt	Flags
Rab5a-201	ENSMUST00000017975.6	2366	215aa	Protein coding	CCDS28879	Q9CQD1	TSL:1 GENCODE basic APPRIS P1
Rab5a-202	ENSMUST00000233347.1	3226	No protein	Retained intron	-	-	-

The strategy is based on the design of *Rab5a-201* transcript, the transcription is shown below:

Genomic location distribution

Protein domain

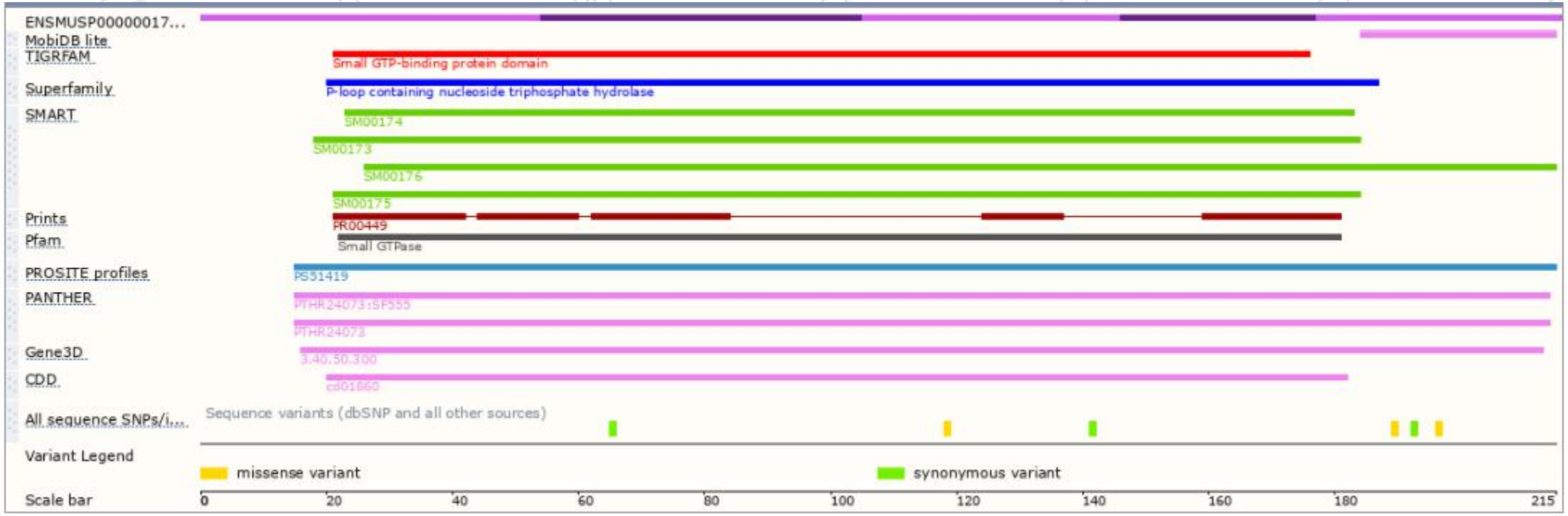

Mouse phenotype description(MGI)

URL link is as follows:
http://www.informatics.jax.org/marker/MGI:105926

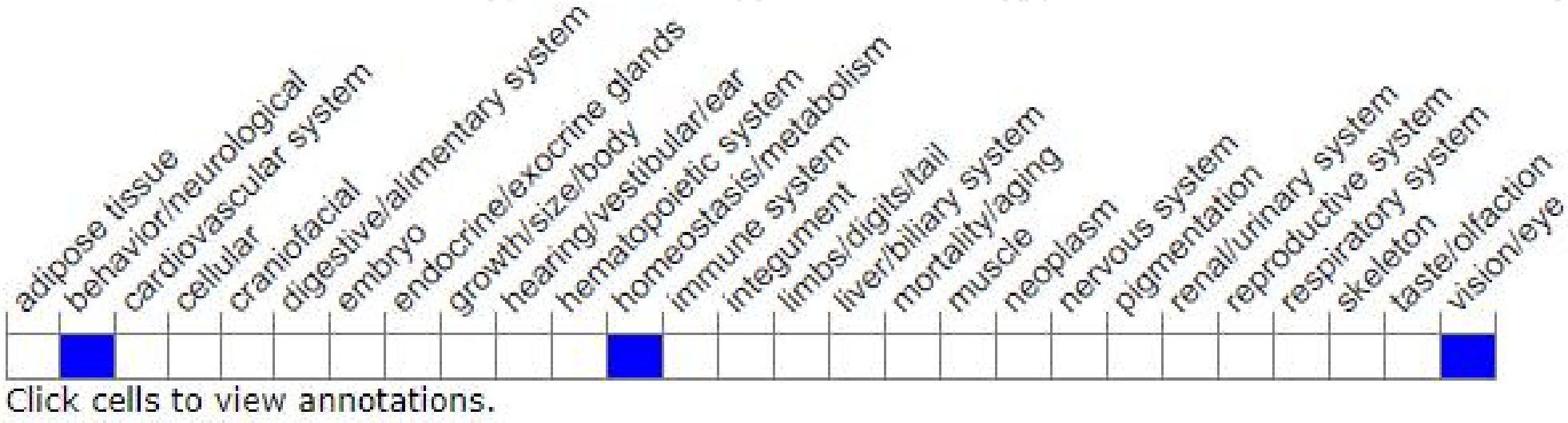

If you have any questions, please feel free to contact us.
Tel: 025-5864 1534

集萃药康生物科技
GemPharmatech Co.,Ltd

GemPharmatech Co.,Ltd