Pum1 Cas9-KO Strategy

Designer: Zihe Cui

Reviewer: Daohua Xu

Design Date: 2020-7-24

集萃药康 GemPharmatech

Project Overview

Project Name	***Pum1***
Project type	**Cas9-KO**
Strain background	**C57BL/6JGpt**

Knockout strategy

This model will use CRISPR/Cas9 technology to edit the *Pum1* gene. The schematic diagram is as follows:

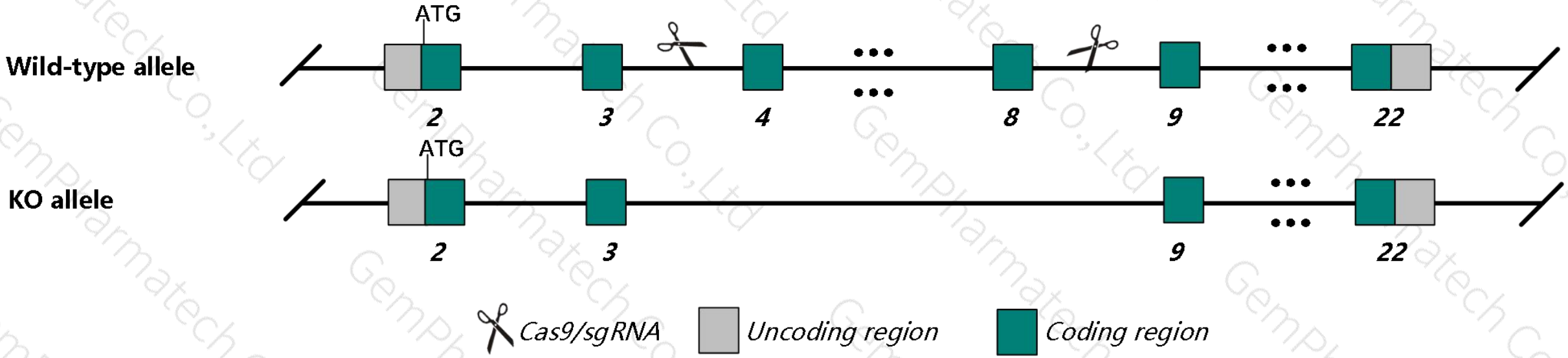

Technical routes

➢ The *Pum1* gene has 7 transcripts. According to the structure of *Pum1* gene, exon4-exon8 of *Pum1-201*(ENSMUST00000030315.12) transcript is recommended as the knockout region.The region contains 820bp coding sequence. Knock out the region will result in disruption of protein function.

➢ In this project we use CRISPR/Cas9 technology to modify *Pum1* gene. The brief process is as follows: gRNA was transcribed in vitro.Cas9 and gRNA were microinjected into the fertilized eggs of C57BL/6JGpt mice.Fertilized eggs were transplanted to obtain positive F0 mice which were confirmed by PCR and sequencing. A stable F1 generation mouse model was obtained by mating positive F0 generation mice with C57BL/6JGpt mice.

Notice

➢ According to the existing MGI data,mice homozygous for a knock-out allele exhibit decreased testes weight and size, decreased body weight, oligozoospermia, reduced male fertility, increased male germ cell apoptosis and small seminiferous tubules.

➢ The *Pum1* gene is located on the Chr4. If the knockout mice are crossed with other mice strains to obtain double gene positive homozygous mouse offspring, please avoid the two genes on the same chromosome.

➢ This strategy is designed based on genetic information in existing databases.Due to the complexity of biological processes,all risk of the gene knockout on gene transcription, RNA splicing and protein translation cannot be predicted at the existing technology level.

Gene information （NCBI）

集萃药康 GemPharmatech

Pum1 pumilio RNA-binding family member 1 [Mus musculus (house mouse)]

Gene ID: 80912, updated on 13-Mar-2020

Summary

Official Symbol	Pum1 provided by MGI
Official Full Name	pumilio RNA-binding family member 1 provided byMGI
Primary source	MGI:MGI:1931749
See related	Ensembl:ENSMUSG00000028580
Gene type	protein coding
RefSeq status	VALIDATED
Organism	Mus musculus
Lineage	Eukaryota; Metazoa; Chordata; Craniata; Vertebrata; Euteleostomi; Mammalia; Eutheria; Euarchontoglires; Glires; Rodentia; Myomorpha; Muroidea; Muridae; Murinae; Mus; Mus
Also known as	AA517475, Pumm, mKIAA0099
Expression	Ubiquitous expression in ovary adult (RPKM 32.2), whole brain E14.5 (RPKM 27.8) and 28 other tissuesSee more
Orthologs	human all

Transcript information（Ensembl）

The gene has 7 transcripts,all transcripts are shown below:

Name	Transcript ID	bp	Protein	Biotype	CCDS	UniProt	Flags
Pum1-201	ENSMUST00000030315.12	5389	1189aa	Protein coding	CCDS18710	Q80U78	TSL:1 GENCODE basic APPRIS P3
Pum1-205	ENSMUST00000105992.8	5058	1092aa	Protein coding	CCDS51313	Q3TTW5	TSL:1 GENCODE basic APPRIS ALT1
Pum1-204	ENSMUST00000105991.8	4614	944aa	Protein coding	CCDS51314	E9Q6M7	TSL:1 GENCODE basic
Pum1-203	ENSMUST00000097864.8	4017	1186aa	Protein coding	CCDS51311	Q80U78	TSL:1 GENCODE basic APPRIS ALT1
Pum1-202	ENSMUST00000097862.2	3991	1188aa	Protein coding	CCDS51312	Q3TQ21 Q80U78	TSL:1 GENCODE basic APPRIS ALT1
Pum1-207	ENSMUST00000143277.7	693	218aa	Protein coding	-	A8WHM8	CDS 3' incomplete TSL:5
Pum1-206	ENSMUST00000122847.1	1273	No protein	Retained intron	-	-	TSL:1

The strategy is based on the design of *Pum1-201* transcript,the transcription is shown below:

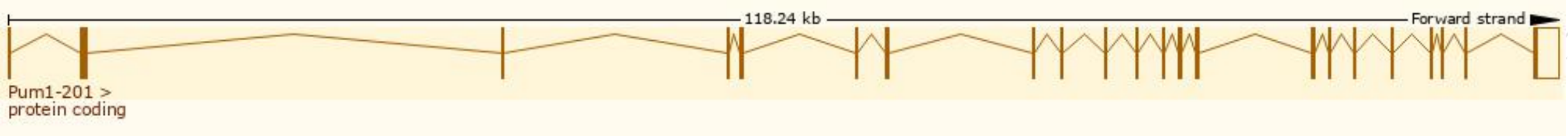

Genomic location distribution

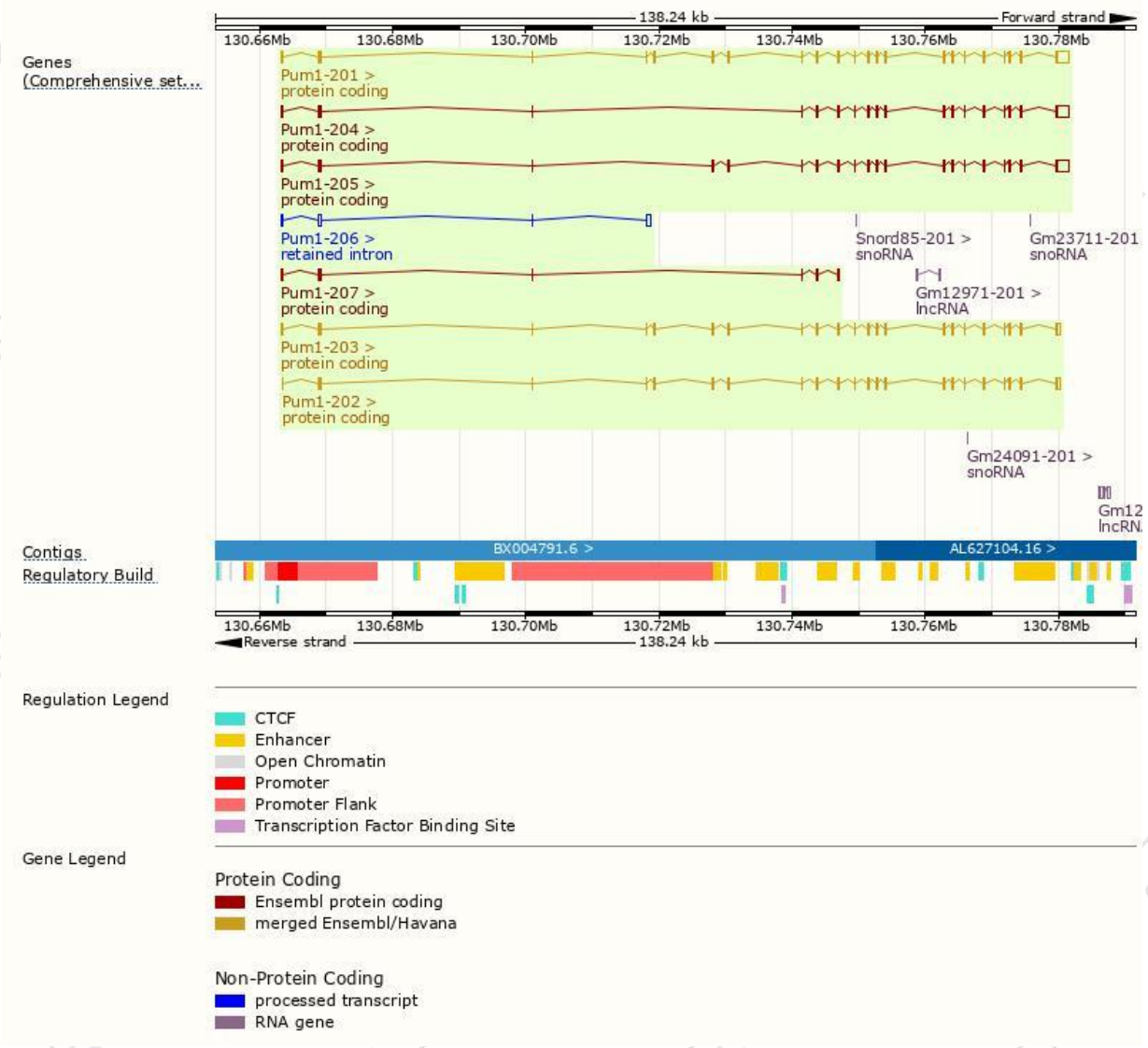

Protein domain

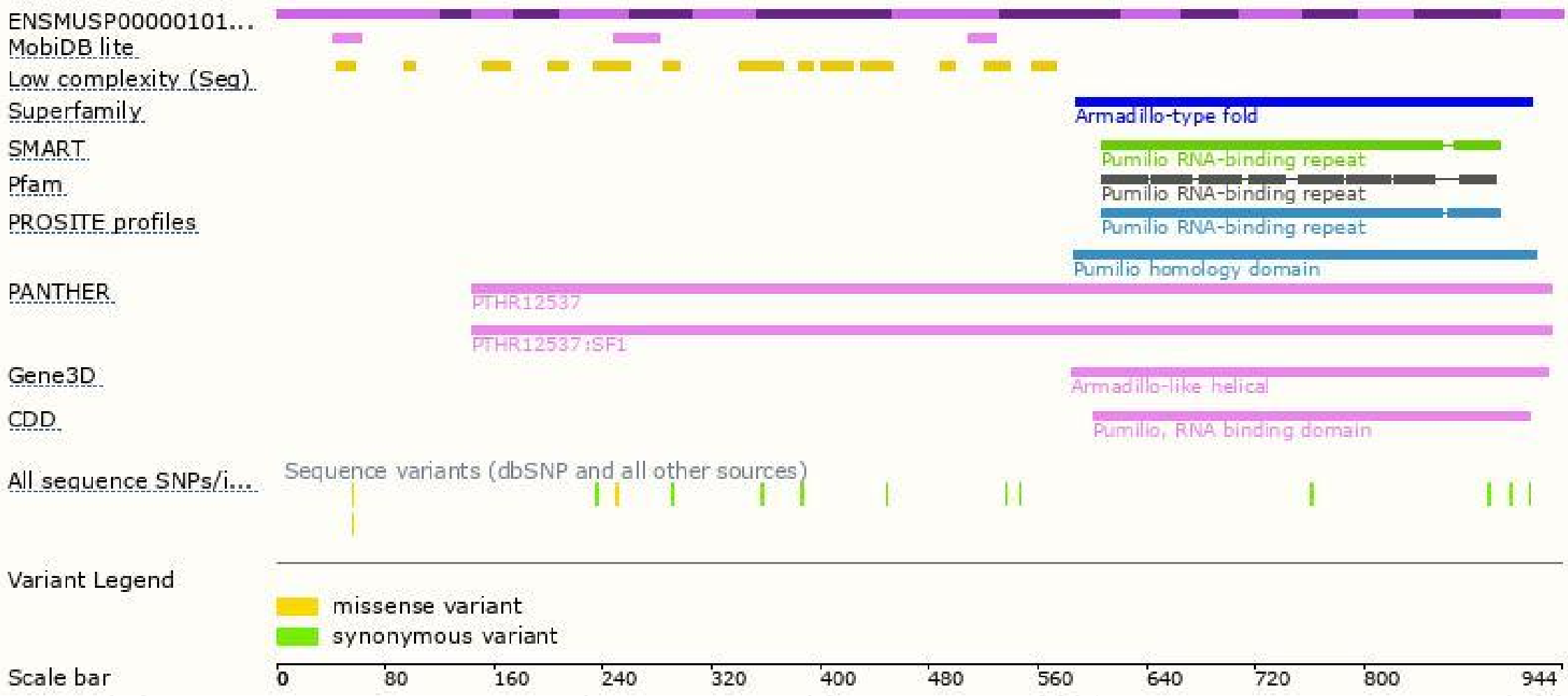

Mouse phenotype description(MGI)

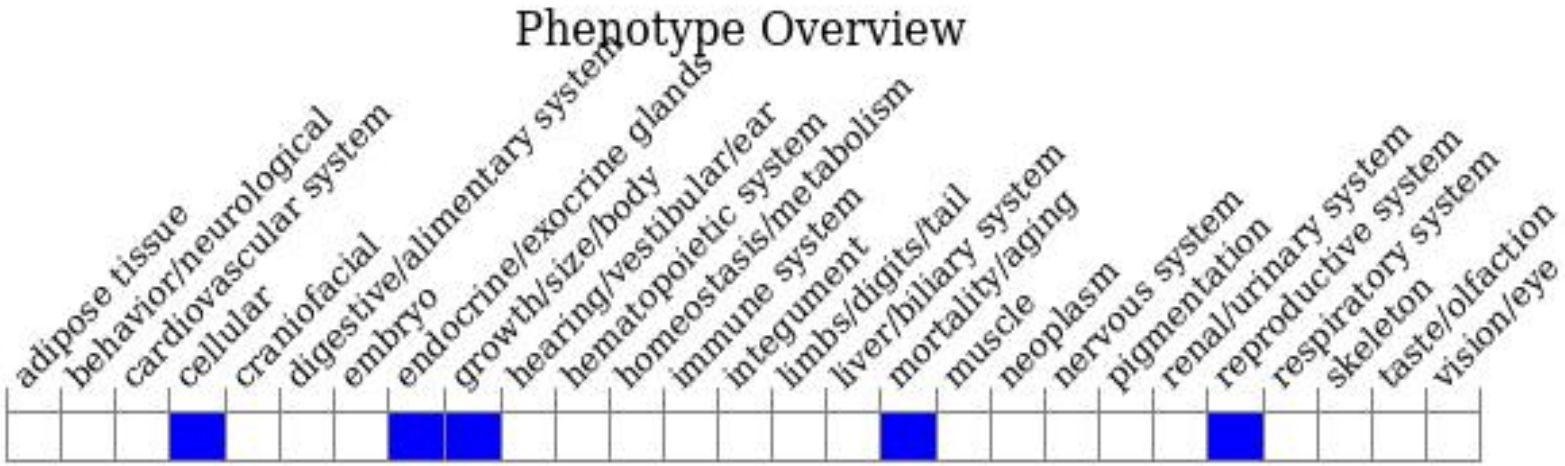

Phenotypes affected by the gene are marked in blue.Data quoted from MGI database(http://www.informatics.jax.org/).

According to the existing MGI data,mice homozygous for a knock-out allele exhibit decreased testes weight and size, decreased body weight, oligozoospermia, reduced male fertility, increased male germ cell apoptosis and small seminiferous tubules.

集萃药康
GemPharmatech

If you have any questions, you are welcome to inquire.
Tel: 400-9660890

集萃药康生物科技
GemPharmatech Co.,Ltd