Hectd3 Cas9-CKO *Strategy*

Designer: **Huan Wang**
Reviewer: **Huan Fan**

Design Date: **2019-12-17**

GemPharmatech Co.,Ltd

Project Overview

Project Name	***Hectd3***
Project type	**Cas9-CKO**
Strain background	**C57BL/6JGpt**

Conditional Knockout strategy

集萃药康 GemPharmatech

This model will use CRISPR/Cas9 technology to edit the *Hectd3* gene. The schematic diagram is as follows:

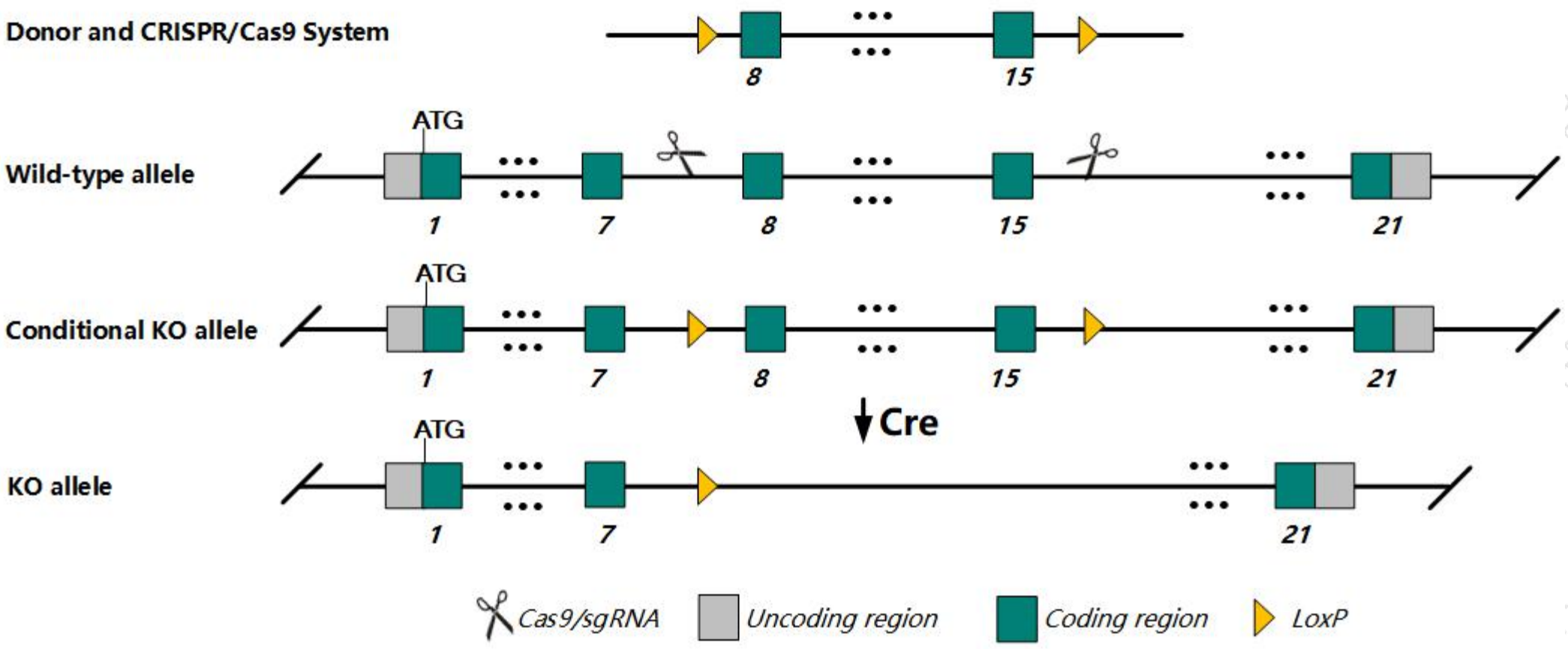

Technical routes

- The *Hectd3* gene has 3 transcript. According to the structure *of Hectd3* gene, exon8-15 of *Hectd3-201*(ENSMUST00000050067.9)transcript is recommended as the knockout region.The region contains 863bp coding sequence.Knock out the region will result in disruption of protein function.

- In this project we use CRISPR/Cas9 technology to modify *Hectd3* gene. The brief process is as follows: gRNA was transcribed in vitro, donor was constructed.Cas9, gRNA and Donor were microinjected into the fertilized eggs of C57BL/6JGpt mice.Fertilized eggs were transplanted to obtain positive F0 mice which were confirmed by PCR and sequencing. A stable F1 generation mouse model was obtained by mating positive F0 generation mice with C57BL/6JGpt mice.

- The flox mice will be knocked out after mating with mice expressing Cre recombinase, resulting in the loss of function of the target gene in specific tissues or cell types.

Notice

- According to the existing MGI data，Mice homozygous for a knock-out allele exhibit decreased susceptibility to intranasal bacterial infection due to suppressed bacterial intracellular replication.
- The KO region is about 3kb away from *Urod* gene. Knockout the region may affect the function of *Urod* gene.
- The *Hectd3* gene is located on the Chr4. If the knockout mice are crossed with other mice strains to obtain double gene positive homozygous mouse offspring, please avoid the two genes on the same chromosome.
- This Strategy is designed based on genetic information in existing databases.Due to the complexity of biological processes, all risk of the loxp insertion on gene transcription, RNA splicing and protein translation cannot be predicted at the existing technology level.

Gene information （NCBI）

集萃药康 GemPharmatech

Hectd3 HECT domain E3 ubiquitin protein ligase 3 [*Mus musculus* (house mouse)]

Gene ID: 76608, updated on 28-Sep-2019

Summary

Official Symbol	Hectd3 provided by MGI
Official Full Name	HECT domain E3 ubiquitin protein ligase 3 provided by MGI
Primary source	MGI:MGI:1923858
See related	Ensembl:ENSMUSG00000046861
Gene type	protein coding
RefSeq status	VALIDATED
Organism	Mus musculus
Lineage	Eukaryota; Metazoa; Chordata; Craniata; Vertebrata; Euteleostomi; Mammalia; Eutheria; Euarchontoglires; Glires; Rodentia; Myomorpha; Muroidea; Muridae; Murinae; Mus; Mus
Also known as	AI467540; AW743312; 1700064K09Rik
Expression	Ubiquitous expression in duodenum adult (RPKM 36.0), small intestine adult (RPKM 35.8) and 28 other tissues See more
Orthologs	human all

Transcript information（Ensembl）

The gene has 3 transcripts, and all transcripts are shown below:

Name	Transcript ID	bp	Protein	Biotype	CCDS	UniProt	Flags
Hectd3-201	ENSMUST00000050067.9	4583	861aa	Protein coding	CCDS18522	Q3U487	TSL:1 GENCODE basic APPRIS P1
Hectd3-202	ENSMUST00000133234.1	400	No protein	Retained intron	-	-	TSL:3
Hectd3-203	ENSMUST00000155267.1	705	No protein	Retained intron	-	-	TSL:5

The strategy is based on the design of *Hectd3-201* transcript,The transcription is shown below

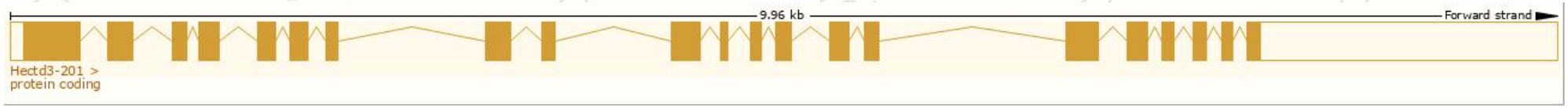

Genomic location distribution

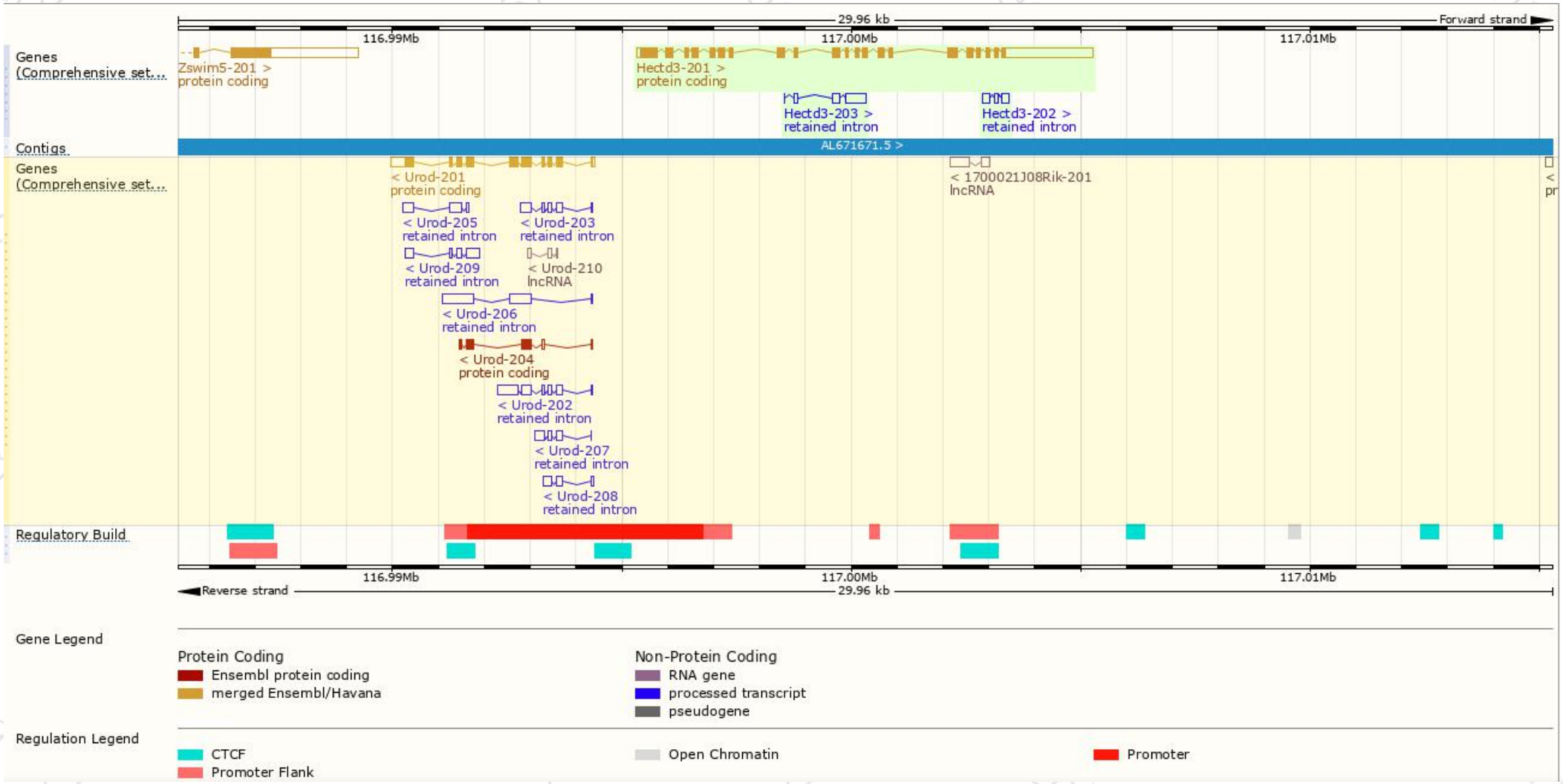

Protein domain

Protein domains for ENSMUSP00000051922.9

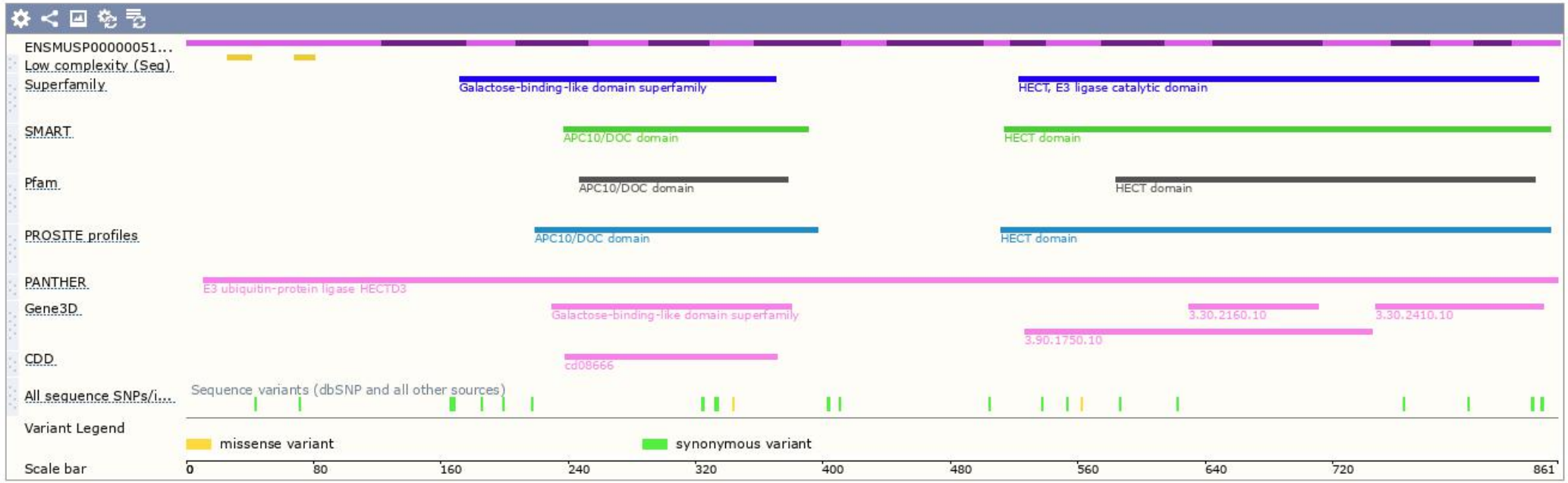

Statistics

Ave. residue weight: 113.063 g/mol
Charge: -15.5
Isoelectric point: 5.1081
Molecular weight: 97,347.11 g/mol
Number of residues: 861 aa

Mouse phenotype description(MGI)

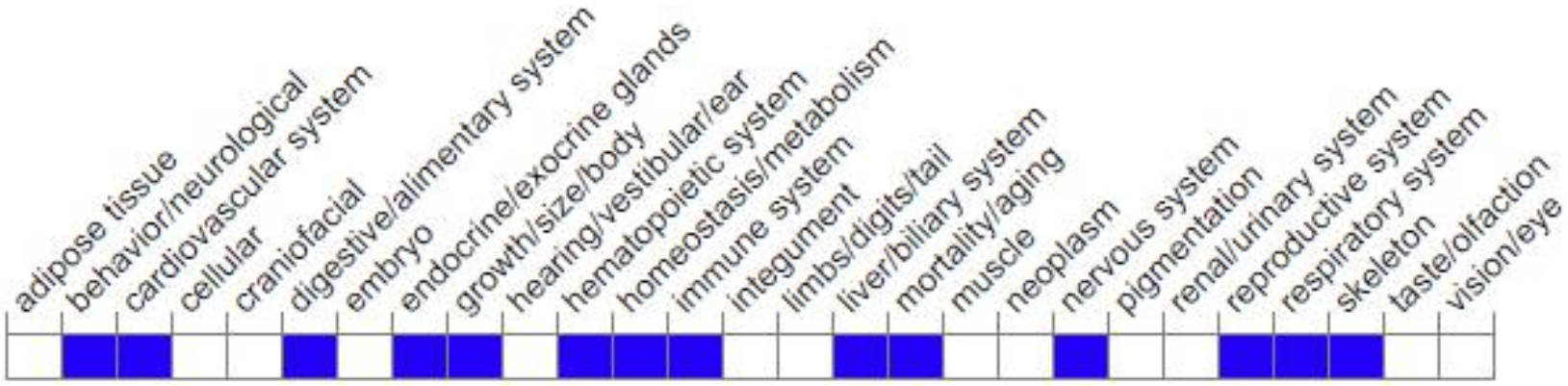

Phenotypes affected by the gene are marked in blue.Data quoted from MGI database(http://www.informatics.jax.org/) .

Mice homozygous for a knock-out allele exhibit decreased susceptibility to intranasal bacterial infection due to suppressed bacterial intracellular replication.

If you have any questions, you are welcome to inquire.
Tel: 400-9660890

集萃药康生物科技
GemPharmatech Co.,Ltd